Tolomatic
EXCELLENCE IN MOTION®

PRODUCT CATALOG

POWER TRANSMISSION

GEARBOXES
CALIPER DISC BRAKES
CLUTCHES

LDA
Solutions for Life

OVER 50 YEARS OF PROVEN PERFORMANCE

CALIPER DISC BRAKES

Visit www.tolomatic.com for the latest updates and ordering.

Caliper Disc Brakes

FEATURES

PNEUMATIC BRAKES

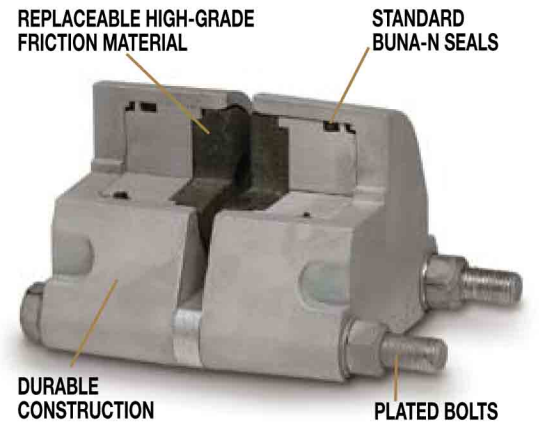

Tolomatic manufactures pneumatic brakes in three sizes: P10 Series, P20 Series and P220 Series. Available in both double acting or single acting. These brakes feature replaceable, high-grade friction material, standard Buna-N seals, aluminum construction and zinc plated bolts. Options include EPR seals,Viton® seals, retractable pistons and floating bracket. (See pages 32 to 37)

HYDRAULIC BRAKES

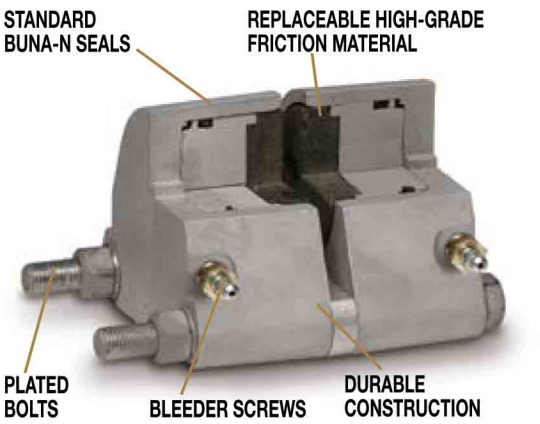

Tolomatic hydraulic caliper disc brakes are available in the widest range of sizes. From the H10 Series up to the H960 Series, these brakes are sure to supply the braking torque you need for your application. Available in both double acting or single acting (depending on model). These brakes feature replaceable, high-grade friction material, standard Buna-N seals, aluminum or cast iron construction (depending on model), bleeder screws and zinc plated bolts. Options include EPR seals,Viton® seals, retractable pistons and floating brackets. (See pages 38 to 49)

HYDRAULIC / MECHANICAL BRAKES

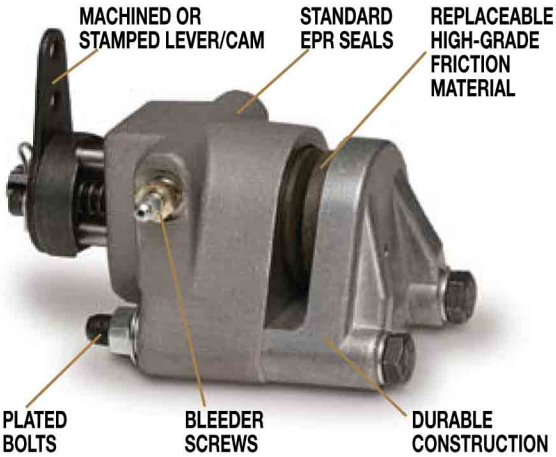

These Tolomatic brakes combine hydraulic and mechanical braking in one caliper. Available in the H/ME20 Series and H/ME220 Series these single acting calipers deliver high braking torque in a small package. Features include: replaceable, high-grade friction material, standard EPR seals, aluminum or cast iron construction (depending on model), bleeder screws and zinc plated bolts. Options include Buna-N seals,Viton® seals and floating brackets. (See pages 50 to 55)

Caliper Disc Brakes

FEATURES

MECHANICAL BRAKES

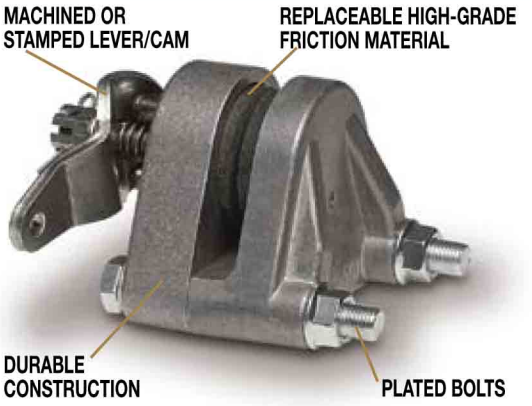

Tolomatic manufactures a broad range of mechanical brakes in these series: ME10, ME20, ME220 and MB3. Designed for use in areas that do not have access to other types of power, these single acting calipers feature replaceable, high-grade friction material, aluminum or cast iron construction (depending on model) and zinc plated bolts. (See pages 56 to 65)

SPRING APPLIED BRAKES

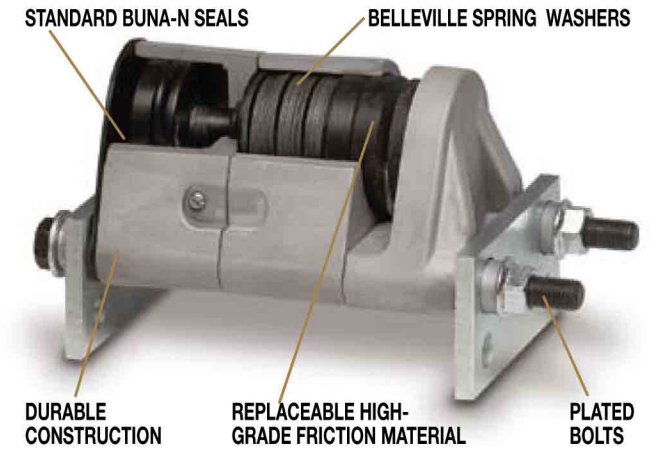

Tolomatic offers spring applied brakes in sizes ranging from FS20 Series to FS595 Series. These brakes require pressure (normally hydraulic) for disc release. Braking force is provided by a stack (or stacks) of Belleville spring washers. The concave washers are capable of storing enormous force. When the brake is pressurized a piston(s) moves to compress the spring washer stack(s), thus releasing the disc. These calipers feature replaceable, high-grade friction material, aluminum or cast iron construction (depending on model), Buna-N seals and zinc plated bolts. Options include EPR seals, retractable pistons and manual compensators. (See pages 66 to 79)

DISC AND HUBS

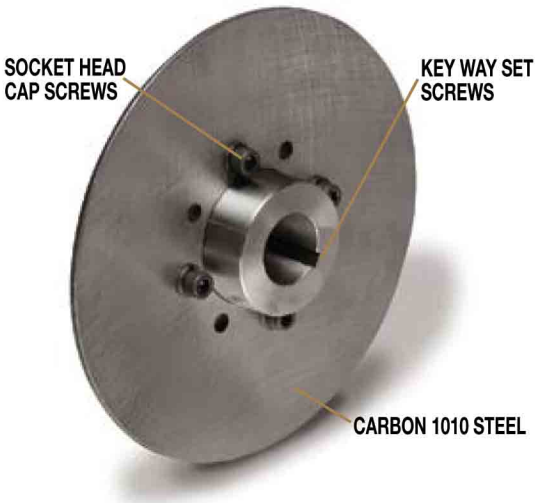

Tolomatic offers several discs and hubs to fit your application. Most are made of carbon 1010 steel, are flat within .010 inch, stress relieved and blanchard ground to an 80 (RMS) microinch finish. Discs also feature socket head cap screw fasteners and key way set screws. Standard disc diameters are 6-5/16, 8,10, 12 and 16 inches. Disc thicknesses range from 5/32" to 1/2". Available: Fixed Hub and Disc Assemblies, Fixed Hub and Disc Assemblies with Q.D. Bushings, Q.D. Bushings and Hubs, One-Piece Hub and Disc, Blank Disc, Disc with Bolt Circles and Pilot Holes, and Ventilated Disc. (See pages 80 to 87)

Caliper Disc Brakes

APPLICATIONS

CONVEYOR BELT EMERGENCY BRAKE

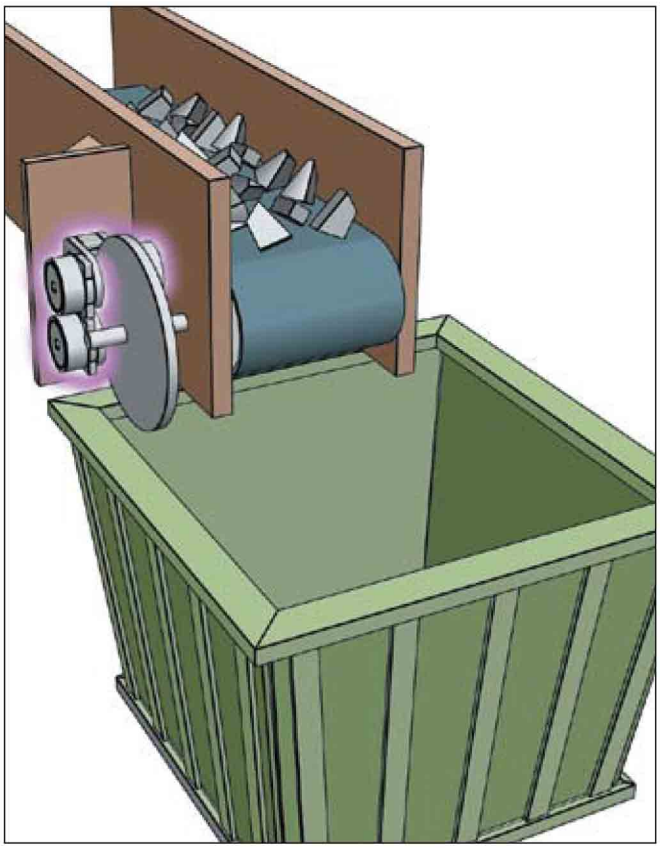

Tolomatic caliper disc brakes find uses in industrial settings all over the world. Used on everything from assembly lines to wind generators and lawn maintenance equipment, Tolomatic calipers offer the braking capacity you need at an economical price. The variety of sizes, maximum torque output and thermal capabilities insure you will find the optimal brake for your application. These illustrations are meant to help you to see ways that our calipers will work for you. Above a Spring Applied Brake is used on a conveyor belt. In this application it will provide braking when hydraulic pressure is *Not* provided to the brake. This type of braking is especially useful in situations where safety is an issue. Since a Spring Applied Brake requires hydraulic pressure to *Release* the brake, in a power shut down these brakes will engage providing positive braking.

TENSIONING APPLICATION

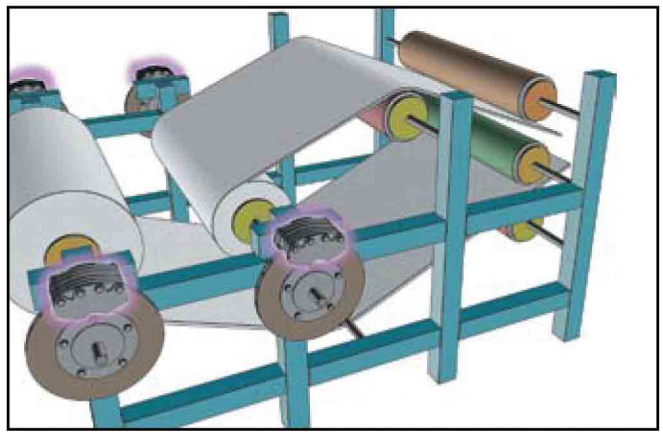

Another great place for Tolomatic brakes is tensioning/ constant slip applications. Used in everything from mylar balloon fabrication to web presses, Tolomatic pneumatic brakes provide dynamic tensioning that is adjusted by the air pressure supplied to the caliper. Because of the constant nature of this type of braking, caliper and disc are sized on thermal characteristics rather than torque.

MACHINE COMPONENTS

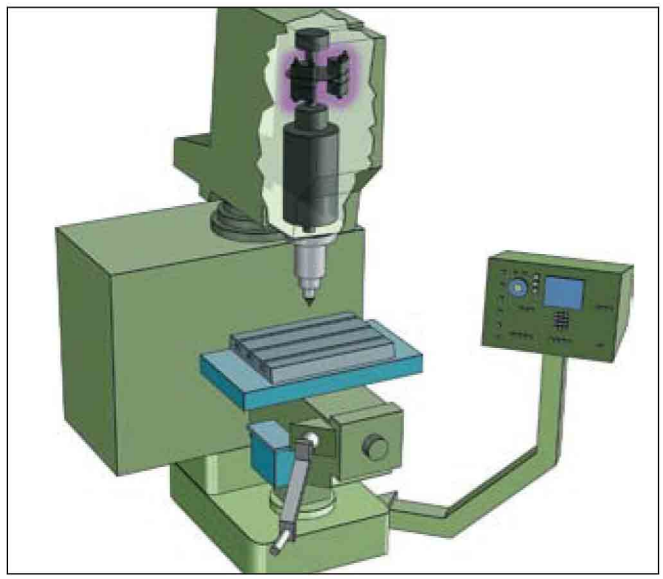

Here two Tolomatic pneumatic brakes are used to increase the productivity of a CNC milling machine. In the original design users had to wait for the machine to coast to a stop before a part could be removed or a tool changed. Electronic deceleration proved to be expensive and harmful to the motor. Tolomatic caliper disc brakes improved stopping time by 500 percent, increasing the machine's productivity and safety.

Caliper Disc Brakes

SELECTION GRAPH & TABLE

DYNAMIC TORQUE - PNEUMATIC, HYDRAULIC

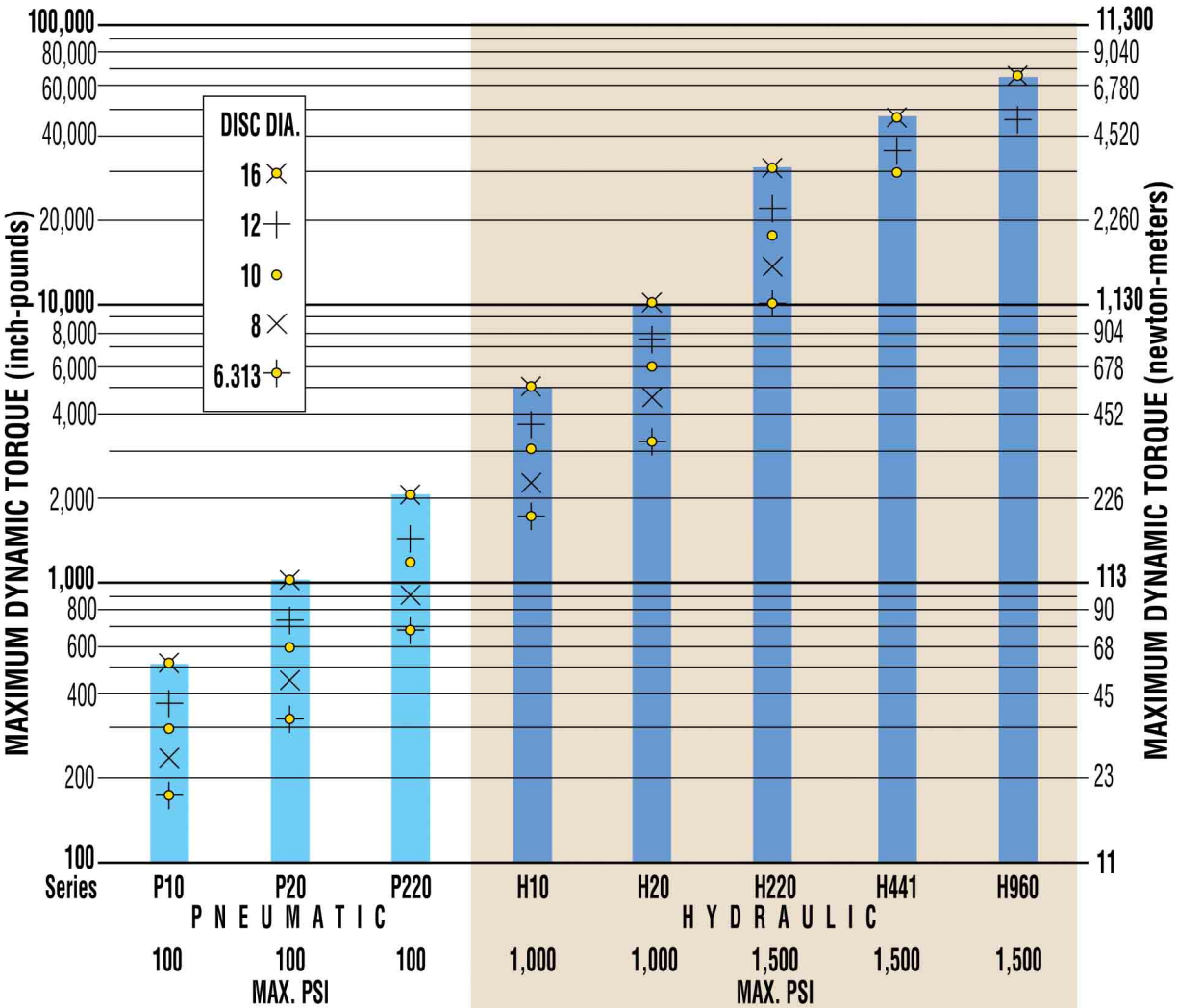

The table below includes the same information as the graph above (adding discs not sold by Tolomatic) with the maximum dynamic torque [inch-pounds] for each series brake using the disc size in left column and PSI at the bottom of the table.

Disc Dia.	P10	P20	P220	H10	H20	H220	H441	H960
6.313	174	328	685	1,737	3,285	10,282		
8	233	450	907	2,328	4,500	13,608		
10	303	594	1,184	3,028	5,940	17,755	19,539	
12	373	738	1,463	3,728	7,380	21,946	24,834	45,672
14	443	882	1,771	4,428	8,820	26,568	30,129	56,052
16	513	1,026	2,076	5,128	10,260	31,147	35,424	66,432
18							40,719	76,812
20							46,014	
22							51,309	
24							56,606	
	100	**100**	**100**	**1,000**	**1,000**	**1,500**	**1,500**	**1,500**
		MAX. PSI				**MAX. PSI**		
		P N E U M A T I C				**H Y D R A U L I C**		

NOTE: GREY BACKGROUND INDICATES DISC SIZES NOT AVAILABLE FROM TOLOMATIC.

Note: Selection instructions and formulae begin on page 89 of this catalog. Please refer to these instructions or call 1-800-328-2174 for assistance.

Caliper Disc Brakes

SELECTION GRAPH & TABLE

STATIC TORQUE - PNEUMATIC, HYDRAULIC, MECHANICAL

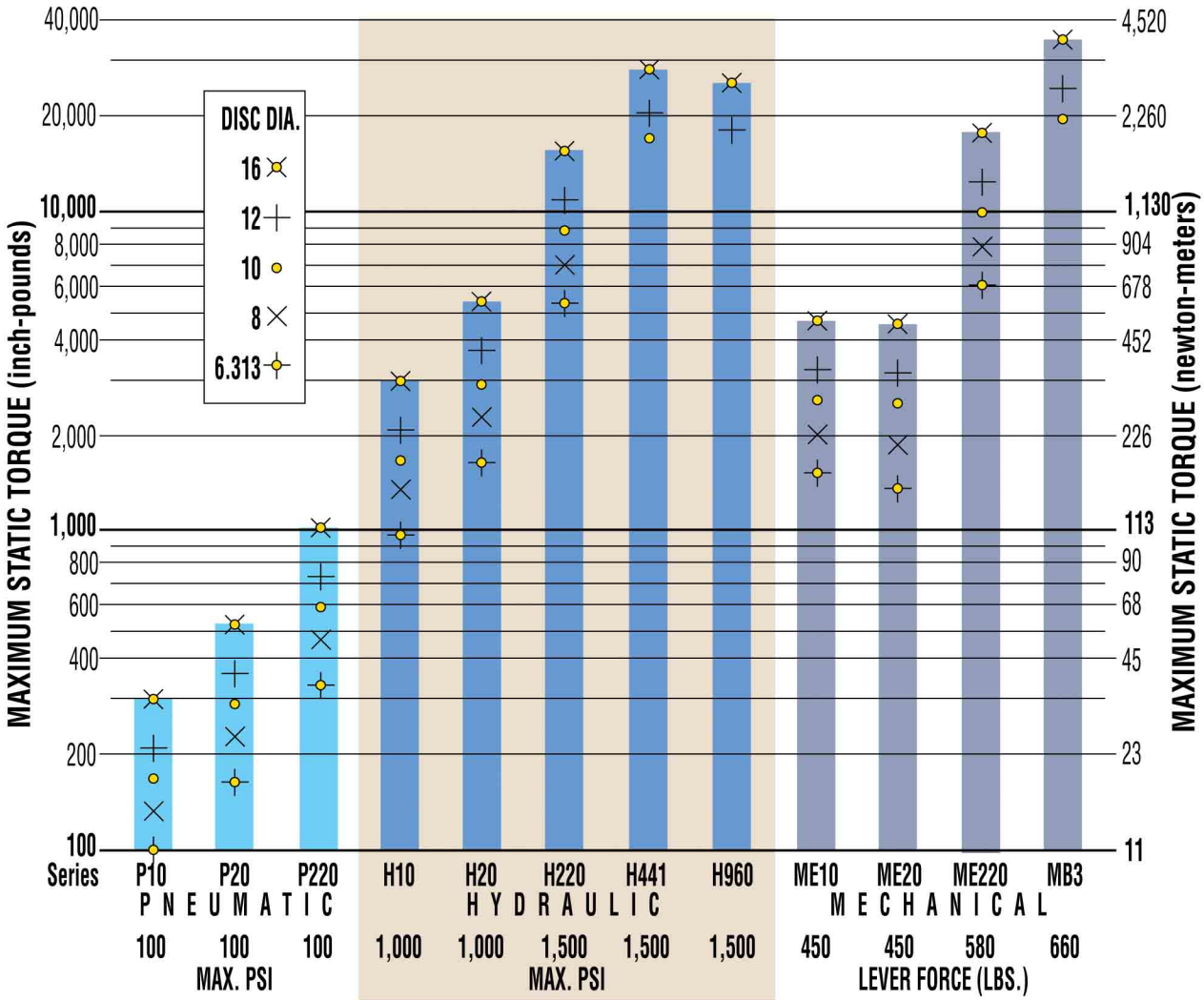

The table below includes the same information as the graph above (adding discs not sold by Tolomatic) with the maximum static torque [inch-pounds] for each series brake using the disc size in left column and PSI (or Lever Force) at the bottom of the table.

Disc Dia.	P10	P20	P220	H10	H20	H220	H441	H960	ME10	ME20	ME220	MB3
6.313	99	164	343	993	1,642	5,141				1,502	1,381	5,851
8	133	225	454	1,330	2,250	6,804				2,012	1,891	7,744
10	173	297	592	1,730	2,970	8,878	11,679		2,618	2,497	10,104	19,893
12	213	369	732	2,130	3,690	10,973	14,844	26,664	3,223	3,102	12,489	24,506
14	253	441	886	2,530	4,410	13,284	18,009	32,724	3,828	3,707	15,120	29,120
16	293	513	1,038	2,930	5,130	15,574	21,174	38,784	4,433	4,312	17,726	33,733
18							24,339	44,844				38,347
20							27,504					42,960
22							30,669					47,573
24							33,834					52,187
26												56,800
28												61,414
30												66,027
	100	**100**	**100**	**1,000**	**1,000**	**1,500**	**1,500**	**1,500**	**450**	**450**	**580**	**660**
	MAX. PSI			**MAX. PSI**					**MAX. LEVER FORCE (LBS.)**			
	PNEUMATIC			**HYDRAULIC**					**MECHANICAL**			

NOTE: GREY BACKGROUND INDICATES DISC SIZES NOT AVAILABLE FROM TOLOMATIC.

Caliper Disc Brakes

SELECTION GRAPH & TABLE

STATIC TORQUE - SPRING APPLIED

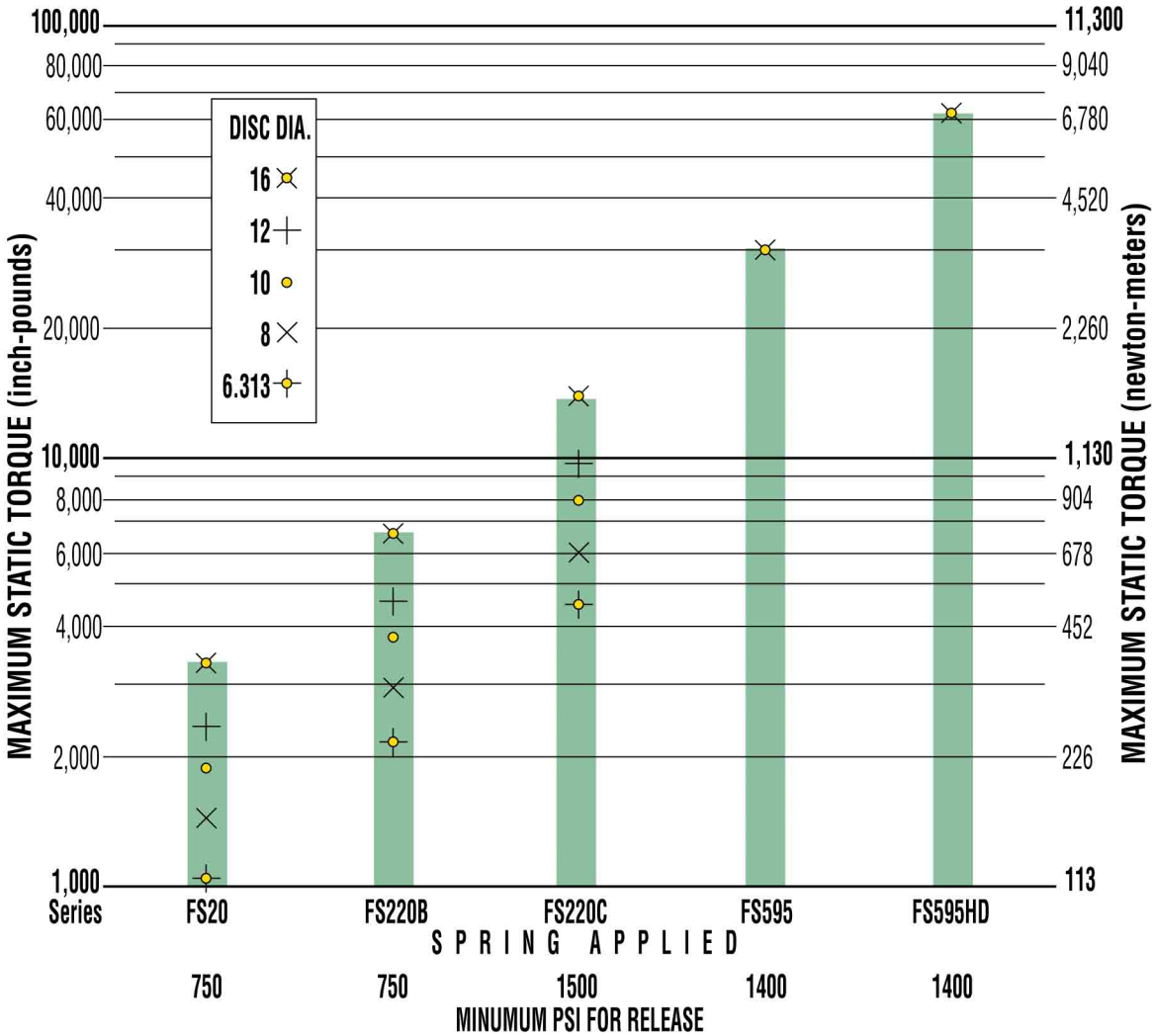

The table below includes the same information as the graph above (adding discs not sold by Tolomatic) with the maximum static torque [inch-pounds] for each series brake using the disc size in left column and release pressure (PSI) at the bottom of the table.

Disc Dia.	FS20	FS220B	FS220C	FS595	FS595 Dual
6.313	1,061	2,213	4,522		
8	1,453	2,930	5,985		
10	1,918	3,822	7,809		
12	2,383	4,724	9,652		
14	2,848	5,715	11,676	26,426	52,853
16	3,313	6,705	13,699	31,046	62,093
18				35,666	71,333
20				40,286	80,573
22				44,906	89,813
24				49,526	99,053
26				54,146	108,293
28				58,766	117,533
30				63,386	126,733
	750	**750**	**1500**	**1400**	**1400**

MINIMUM PSI FOR RELEASE

Note: Selection instructions and formulae begin on page 89 of this catalog. Please refer to these instructions or call 1-800-328-2174 for assistance.

NOTE: GREY BACKGROUND INDICATES DISC SIZES NOT AVAILABLE FROM TOLOMATIC.

Caliper Disc Brakes

P10 SERIES - ALUMINUM

AVAILABLE STYLES

Double Acting

FIXED MOUNT - FIXED DISC

PICTURED: 0701-0000

Single Acting

FIXED MOUNT - FLOATING DISC

PICTURED: 0705-0000

Single Acting with Floating Bracket

FLOATING MOUNT - FIXED DISC

PICTURED: 0705-0001

P10 SPECIFICATIONS

Maximum Pressure Rating:	100 PSI
Accommodates Tolomatic disc diameters:	6-5/16", 8", 10", 12", 16"
Maximum disc diameter:	none
Housing Material:	Extruded aluminum
Bolts:	Zinc plated grade 5
Seals:	Buna-N Standard
Wearable friction material:	0.46 cu. in.
Wearable friction material/retractable models:	0.11 cu. in.
Friction material:	Replaceable, high-grade
Total lining area:	2.00 sq. in.
Piston diameter:	1.125 in.
Fluid displacement, non-retractable:	Single acting = 0.029 cu. in. Double acting = 0.029 cu. in.
OPTIONS	
Seals:	EPR seals
Pistons:	Retractable piston(s)
Floating bracket:	Stamped steel construction

PERFORMANCE DATA

Dynamic Torque vs Pressure

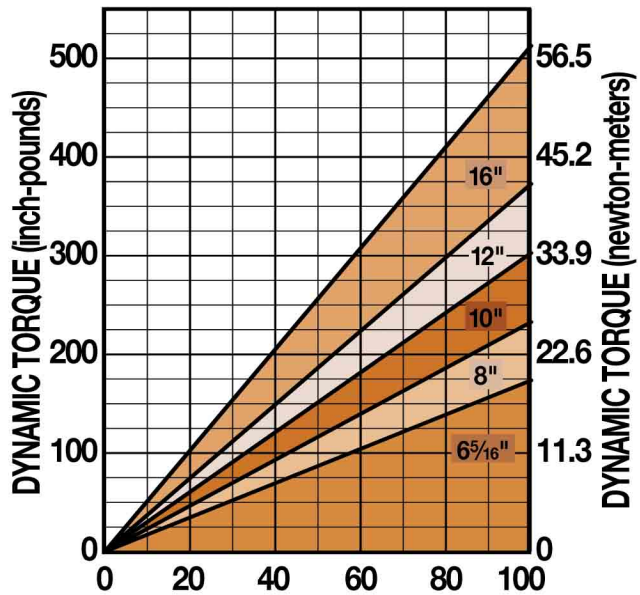

Static Torque vs Pressure

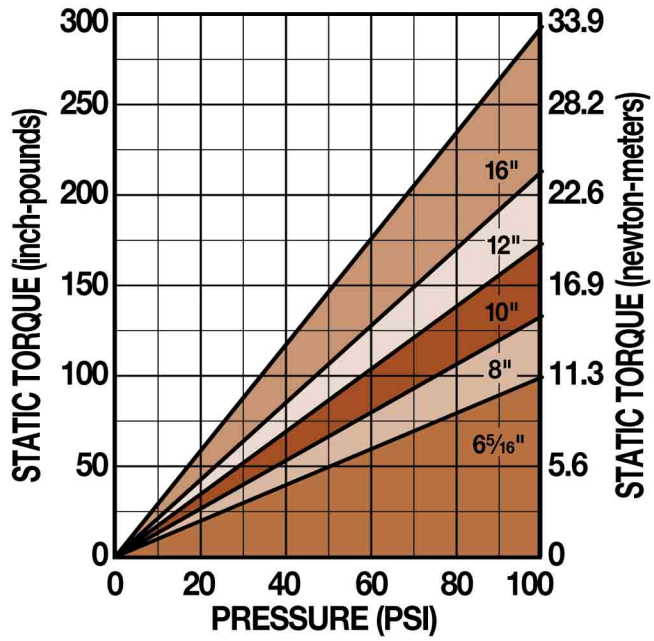

DISC SIZING EQUATIONS

DYNAMIC TORQUE (IN.-LBS.) = **0.70 x BRAKING RADIUS** (IN.) **x PRESSURE** (PSI)
STATIC (PARKING) TORQUE (IN.-LBS.) = **0.40 x BRAKING RADIUS** (IN.) **x PRESSURE** (PSI)
BRAKING RADIUS (IN.) = **[DISC DIAMETER ÷ 2] - 0.675**

Caliper Disc Brakes

P10 SERIES - ALUMINUM

DOUBLE ACTING

FIXED MOUNT - FIXED DISC

Accommodates disc thickness: 5/32" 1/4" 3/8" 1/2"

Weight 1.0 lbs. .45 kgs.

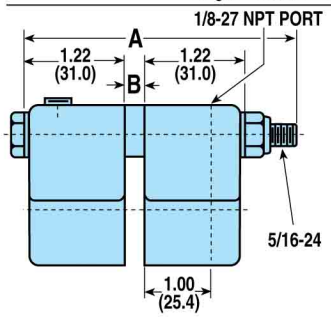

MODEL CODE	DISC THK.	A	B	OPTIONS / DESCRIPTION	ASSEMBLY NUMBER
P10DA	5/32"	3.50"	.281"	Double Acting	0701-0000
P10DAR	5/32"	3.50"	.281"	Double Acting, Retractable Pistons	0708-0000
P10DB	1/4"	3.50"	.375"	Double Acting	0702-0000
P10DBR	1/4"	3.50"	.375"	Double Acting, Retractable Pistons	0709-0000
P10DER	1/2"	4.00"	.625"	Double Acting, Retractable Pistons	0709-0003
P10DL	3/8"	4.00"	.500"	Double Acting	0702-0002
P10DLR	3/8"	4.00"	.500"	Double Acting, Retractable Pistons	0709-0002

SINGLE ACTING

FIXED MOUNT - FLOATING DISC

Accommodates disc thickness: 5/32" 1/4"

Weight .75 lbs. .34 kgs.

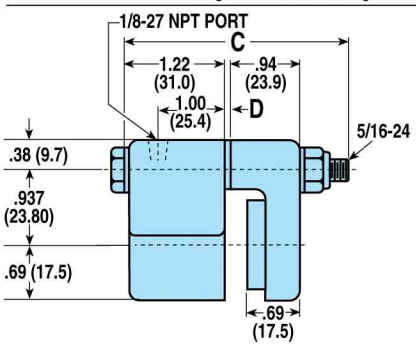

MODEL CODE	DISC THK.	C	D	OPTIONS / DESCRIPTION	ASSEMBLY NUMBER
P10SA	5/32"	3.00"	–	Single Acting	0705-0000
P10SB	1/4"	3.00"	.094"	Single Acting	0703-0000

SINGLE ACTING WITH FLOATING BRACKET

FLOATING MOUNT - FIXED DISC

Accommodates disc thickness: 5/32" 1/4"

Weight 1.5 lbs. .68 kgs.

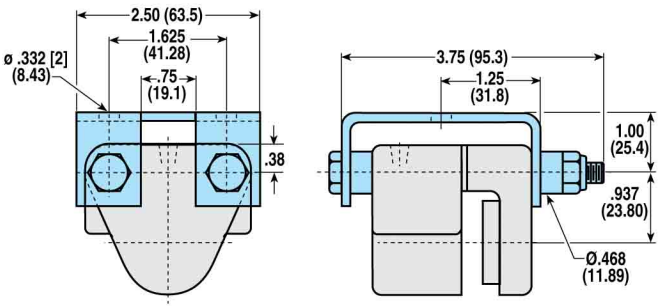

See SINGLE ACTING dimensional drawing for additional measurements

MODEL CODE	DISC THK.	C	D	OPTIONS / DESCRIPTION	ASSEMBLY NUMBER
P10SAF	5/32"	3.00"	–	Single Acting, Floating Bracket	0705-0001
P10SBF	1/4"	3.00"	.094"	Single Acting, Floating Bracket	0703-0001

MOUNTING DIMENSIONS

Disc Diameter	**E**	6.313"	8"	10"	12"	16"
	F	3.469"	4.313"	5.313"	6.313"	8.313"
Braking Radius	**G**	2.482"	3.325"	4.325"	5.325"	7.325"

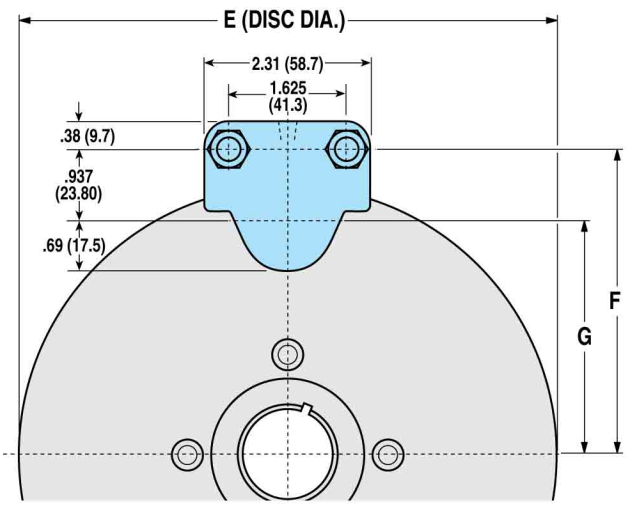

BRAKE MODEL LETTER CODES

A 5/32" Thick Disc	**E** 1/2" Thick Disc	**P** Pneumatic Brake
B 1/4" Thick Disc	**F** Floating Bracket Mount	**R** Retractable Piston(s)
D Double Acting	**L** 3/8" Thick Disc	**S** Single Acting

Caliper Disc Brakes

P20 SERIES - ALUMINUM

AVAILABLE STYLES

Double Acting

FIXED MOUNT - FIXED DISC

PICTURED: 0720-0000

Single Acting

FIXED MOUNT - FLOATING DISC

PICTURED: 0724-0000

Single Acting with Floating Bracket

FLOATING MOUNT - FIXED DISC

PICTURED: 0724-0001

P20 SPECIFICATIONS

Maximum Pressure Rating:	100 PSI
Accommodates Tolomatic disc diameters:	6-5/16", 8", 10", 12", 16"
Maximum disc diameter:	none
Housing Material:	Extruded aluminum
Bolts:	Zinc plated grade 8
Seals:	Buna-N Standard
Wearable friction material:	0.83 cu. in.
Wearable friction material/retractable models:	0.48 cu. in.
Friction material:	Replaceable, high-grade
Total lining area:	4.00 sq. in.
Piston diameter:	1.625 in.
Fluid displacement, non-retractable:	Single acting = 0.062 cu. in. Double acting = 0.062 cu. in.
OPTIONS	
Seals:	EPR seals
Pistons:	Retractable piston(s)
Floating bracket:	Stamped steel construction

PERFORMANCE DATA

Dynamic Torque vs Pressure

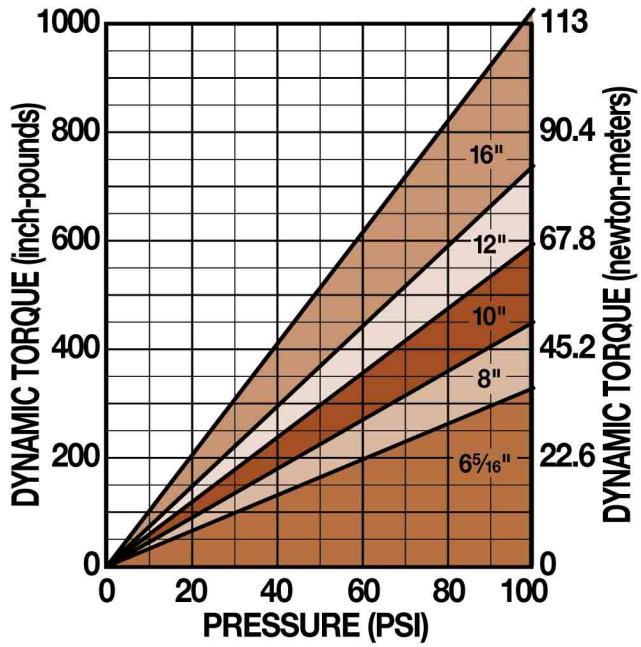

Static Torque vs Pressure

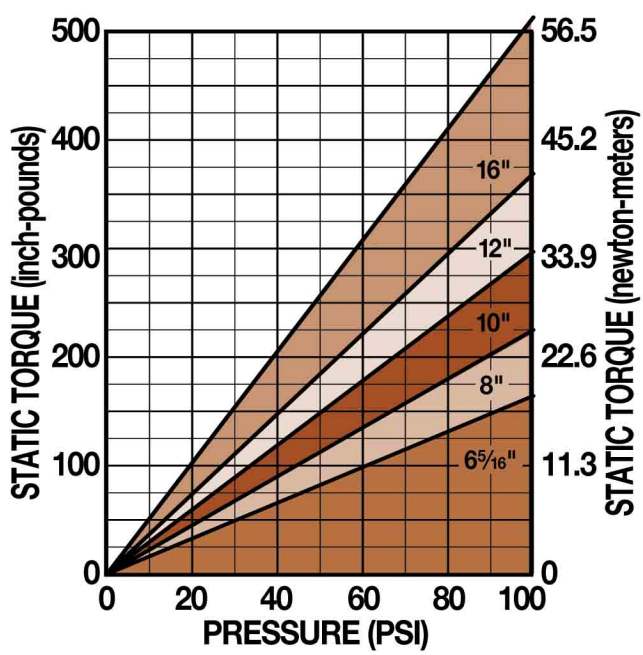

DISC SIZING EQUATIONS

DYNAMIC TORQUE (IN.-LBS.) = **1.44 x BRAKING RADIUS** (IN.) **x PRESSURE** (PSI)
STATIC (PARKING) TORQUE (IN.-LBS.) = **0.72 x BRAKING RADIUS** (IN.) **x PRESSURE** (PSI)
BRAKING RADIUS (IN.) = **[DISC DIAMETER ÷ 2] - 0.875**

Caliper Disc Brakes

P20 SERIES - ALUMINUM

DOUBLE ACTING

FIXED MOUNT - FIXED DISC

Accommodates disc thickness:	5/32"	1/4"	3/8"	1/2"
Weight	2.0 lbs.	.91 kgs.		

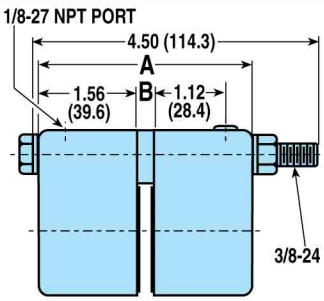

MODEL CODE	DISC THK.	A	B	OPTIONS / DESCRIPTION	ASSEMBLY NUMBER
P20DA	5/32"	3.41"	0.281"	Double Acting	0720-0000
P20DAR	5/32"	3.41"	0.281"	Double Acting, Retractable Pistons	0728-0000
P20DB	1/4"	3.50"	0.375"	Double Acting	0721-0000
P20DBR	1/4"	3.50"	0.375"	Double Acting, Retractable Pistons	0729-0000
P20DL	3/8"	3.62"	0.500"	Double Acting	0720-0013
P20DLR	3/8"	3.62"	0.500"	Double Acting, Retractable Pistons	0729-0001
P20DE	1/2"	3.75"	0.625"	Double Acting	0725-0000
P20DER	1/2"	3.75"	0.625"	Double Acting, Retractable Pistons	0719-0000

SINGLE ACTING

FIXED MOUNT - FLOATING DISC

Accommodates disc thickness:	5/32"	1/4"	3/8"
Weight	1.5 lbs.	.68 kgs.	

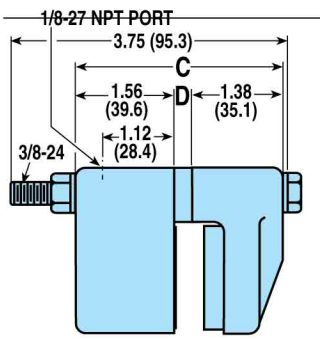

MODEL CODE	DISC THK.	C	D	OPTIONS / DESCRIPTION	ASSEMBLY NUMBER
P20SA	5/32"	2.94"	–	Single Acting	0724-0000
P20SB	1/4"	3.03"	0.093"	Single Acting	0722-0000
P20SL	3/8"	3.16"	0.219"	Single Acting	0722-0002

SINGLE ACTING WITH FLOATING BRACKET

FLOATING MOUNT - FIXED DISC

Accommodates disc thickness:	5/32"	1/4"
Weight	2.0 lbs.	.91 kgs.

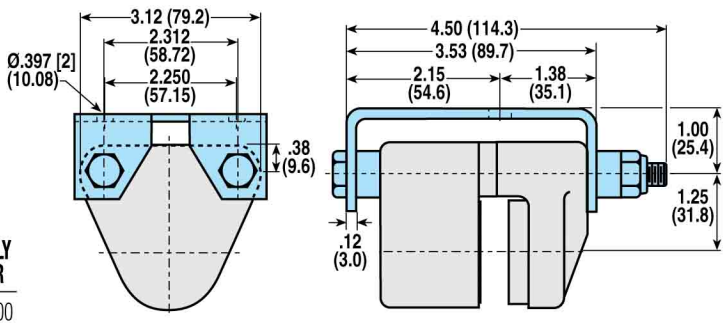

See SINGLE ACTING dimensional drawing for additional measurements

MODEL CODE	DISC THK.	C	D	OPTIONS / DESCRIPTION	ASSEMBLY NUMBER
P20SAF	5/32"	2.94"	–	Single Acting, Floating Bracket	0724-0001
P20SBF	1/4"	3.03"	0.093"	Single Acting, Floating Bracket	0722-0001

MOUNTING DIMENSIONS

Disc Diameter	**E**	6.313"	8"	10"	12"	16"
	F	3.531"	4.375"	5.375"	6.375"	8.375"
Braking Radius	**G**	2.281"	3.125"	4.125"	5.125"	7.125"

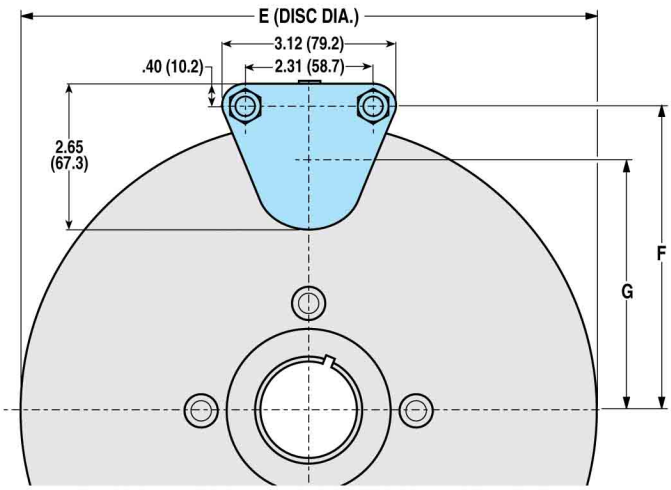

BRAKE MODEL LETTER CODES

A 5/32" Thick Disc	**E** 1/2" Thick Disc	**P** Pneumatic Brake
B 1/4" Thick Disc	**F** Floating Bracket Mount	**R** Retractable Piston(s)
D Double Acting	**L** 3/8" Thick Disc	**S** Single Acting

Caliper Disc Brakes

P220 SERIES - ALUMINUM

AVAILABLE STYLES

Double Acting

FIXED MOUNT - FIXED DISC

PICTURED: 0735-0100

Single Acting

FIXED MOUNT - FLOATING DISC

PICTURED: 0733-0000

Single Acting with Floating Bracket

FLOATING MOUNT - FIXED DISC

PICTURED: 0733-0022

P220 SPECIFICATIONS

Maximum Pressure Rating:	100 PSI
Accommodates Tolomatic disc diameters:	6-5/16", 8", 10", 12", 16"
Maximum disc diameter:	16"
Housing Material:	Die cast aluminum
Bolts:	Zinc plated grade 8
Seals:	Buna-N Standard
Wearable friction material:	1.66 cu. in.
Wearable friction material/retractable models:	0.95 cu. in.
Friction material:	Replaceable, high-grade
Total lining area:	8.00 sq. in.
Piston diameter:	1.625 in.
Fluid displacement, non-retractable:	Single acting = 0.124 cu. in. Double acting = 0.124 cu. in.
OPTIONS	
Seals:	EPR seals
Pistons:	Retractable piston(s)
Floating bracket:	Available

PERFORMANCE DATA

Dynamic Torque vs Pressure

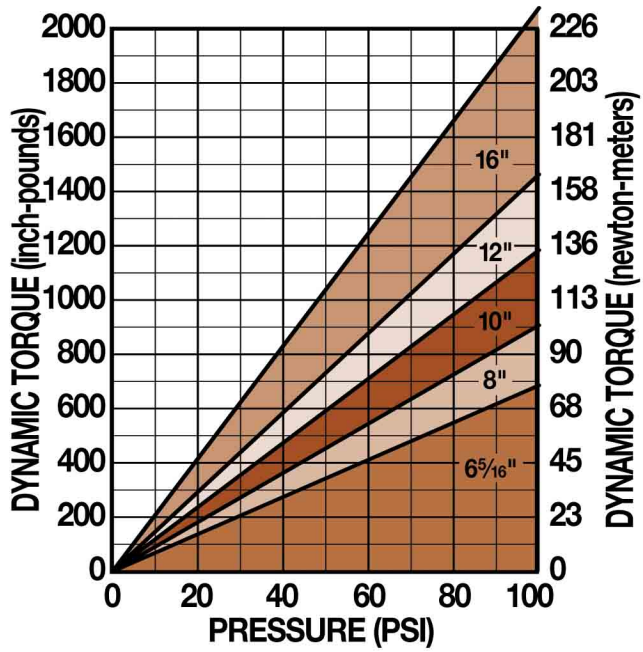

Static Torque vs Pressure

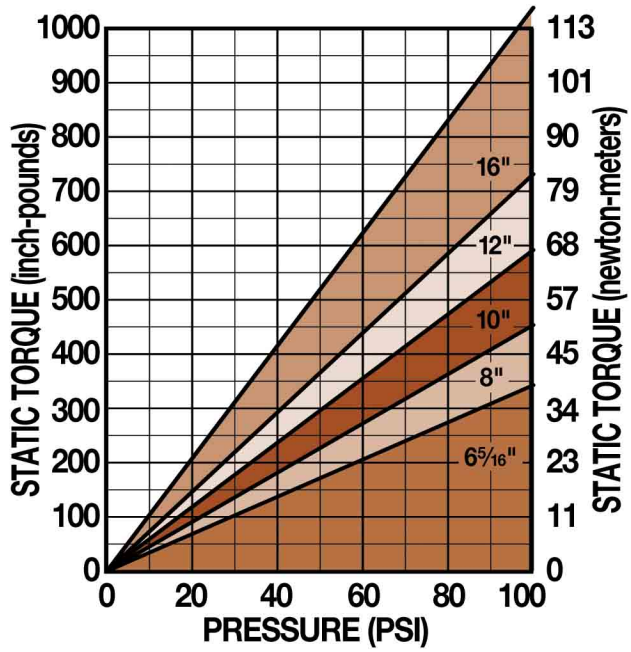

DISC SIZING EQUATIONS

DYNAMIC TORQUE (IN.-LBS.) = **2.88 x BRAKING RADIUS** (IN.) **x PRESSURE** (PSI)
STATIC (PARKING) TORQUE (IN.-LBS.) = **1.44 x BRAKING RADIUS** (IN.) **x PRESSURE** (PSI)

Caliper Disc Brakes

P220 SERIES - ALUMINUM

DOUBLE ACTING

FIXED MOUNT - FIXED DISC

Accommodates disc thickness:	5/32"	1/4"	1/2"
Weight	4.0 lbs.	1.82 kgs.	

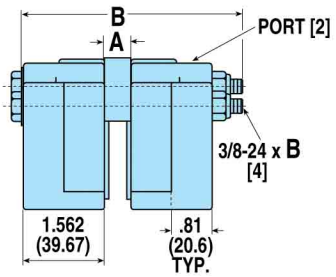

MODEL CODE	DISC THK.	A	B	OPTIONS / DESCRIPTION	ASSEMBLY NUMBER
P220DA	5/32"	0.28"	4.50"	Double Acting	0735-0100
P220DAR	5/32"	0.28"	4.50"	Double Acting, Retractable Pistons	0736-0110
P220DB	1/4"	0.38"	4.50"	Double Acting	0735-0200
P220DBR	1/4"	0.38"	4.50"	Double Acting, Retractable Pistons	0736-0210
P220DE	1/2"	0.62"	5.00"	Double Acting	0735-0300
P220DER	1/2"	0.62"	5.00"	Double Acting, Retractable Pistons	0736-0310

SINGLE ACTING

FIXED MOUNT - FLOATING DISC

Accommodates disc thickness:	5/32"	1/4"	1/2"
Weight	3.0 lbs.	1.36 kgs.	

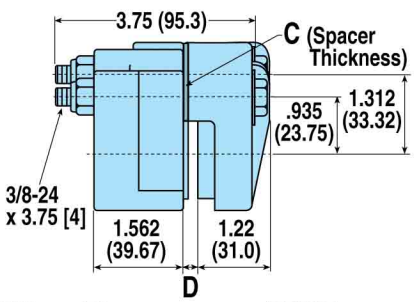

MODEL CODE	DISC THK.	C	D	OPTIONS / DESCRIPTION	ASSEMBLY NUMBER
P220SA	5/32"	–	0.25"	Single Acting	0733-0000
P220SB	1/4"	0.094"	0.34"	Single Acting	0733-0100
P220SE	1/2"	0.344"	0.59"	Single Acting	0733-0200

BRAKE MODEL LETTER CODES

A 5/32" Thick Disc	**E** 1/2" Thick Disc	**R** Retractable Piston(s)
B 1/4" Thick Disc	**F** Floating Bracket Mount	**S** Single Acting
D Double Acting	**P** Pneumatic Brake	

SINGLE ACTING WITH FLOATING BRACKET

FLOATING MOUNT - FIXED DISC

Accommodates disc thickness:	5/32"	1/4"	1/2"
Weight	4.5 lbs.	2.04 kgs.	

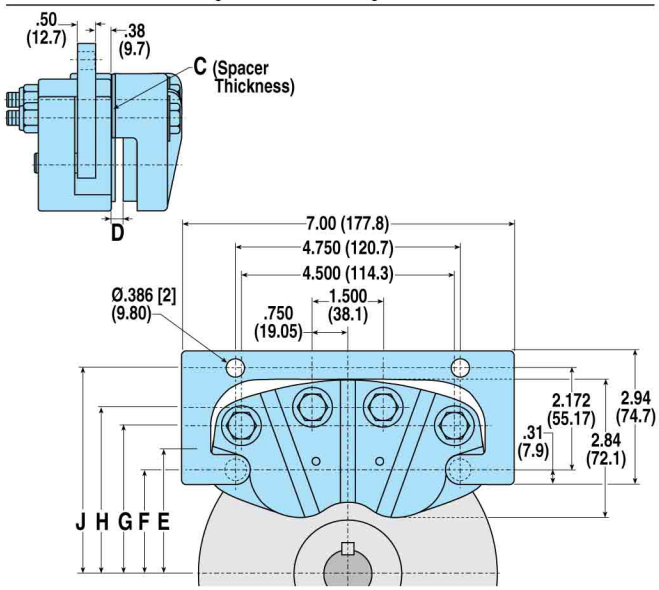

See SINGLE ACTING dimensional drawing for additional measurements

MODEL CODE	DISC THK.	C	D	OPTIONS / DESCRIPTION	ASSEMBLY NUMBER
P220SAF	5/32"	–	0.25"	Single Acting, Floating Bracket	0733-0020
P220SBF	1/4"	0.094"	0.34"	Single Acting, Floating Bracket	0733-0120
P220SEF	1/2"	0.344"	0.59"	Single Acting, Floating Bracket	0733-0220

MOUNTING DIMENSIONS

Disc Diameter		6.313"	8"	10"	12"	16"
Braking Radius	E	2.38"	3.15"	4.11"	5.08"	7.21"
	F	2.13"	3.00"	4.00"	5.00"	7.09"
	G	3.07"	3.94"	4.94"	5.94"	8.03"
	H	3.45"	4.32"	5.32"	6.32"	8.41"
	J	4.30"	5.17"	6.17"	7.17"	9.26"

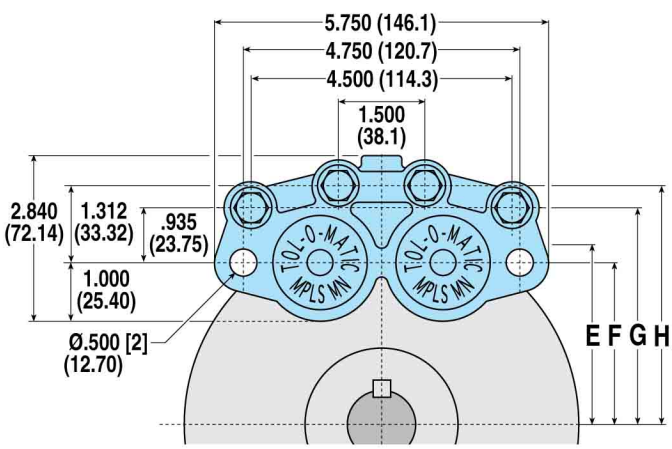

Caliper Disc Brakes

H10 SERIES - ALUMINUM

AVAILABLE STYLES

Double Acting

FIXED MOUNT - FIXED DISC

PICTURED: 0701-0010

Single Acting

FIXED MOUNT - FLOATING DISC

PICTURED: 0705-0010

Single Acting with Floating Bracket

FLOATING MOUNT - FIXED DISC

PICTURED: 0705-0011

H10 SPECIFICATIONS

Maximum Pressure Rating:	1,000 PSI
Accommodates Tolomatic disc diameters:	6-5/16", 8", 10", 12", 16"
Maximum disc diameter:	none
Housing Material:	Extruded aluminum
Bolts:	Zinc plated grade 5
Seals:	Buna-N Standard
Wearable friction material:	0.46 cu. in.
Wearable friction material/retractable models:	0.11 cu. in.
Friction material:	Replaceable, high-grade
Total lining area:	2.00 sq. in.
Piston diameter:	1.125 in.
Fluid displacement, non-retractable:	Single acting = 0.029 cu. in. Double acting = 0.029 cu. in.
OPTIONS	
Seals:	EPR seals
Pistons:	Retractable piston(s)
Floating bracket:	Stamped steel construction

PERFORMANCE DATA

Dynamic Torque vs Pressure

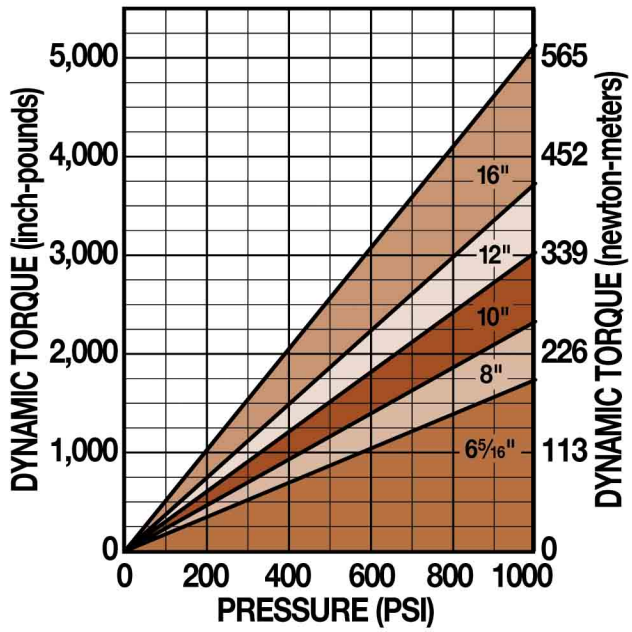

Static Torque vs Pressure

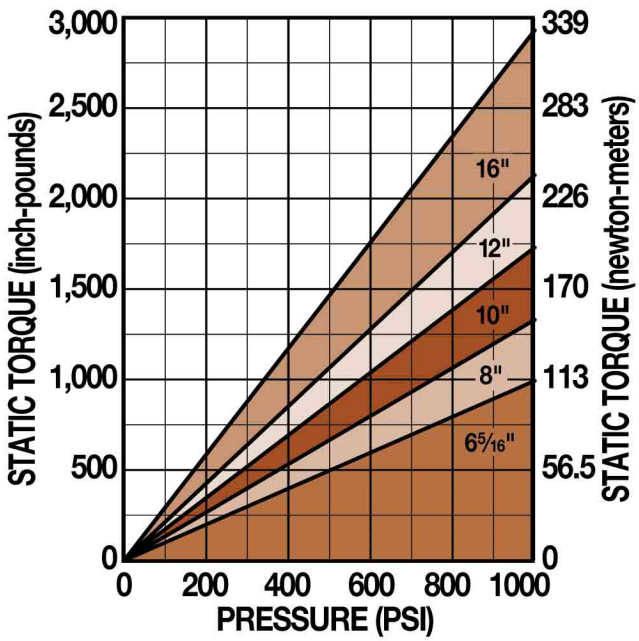

DISC SIZING EQUATIONS

DYNAMIC TORQUE (IN.-LBS.) = **0.70 x BRAKING RADIUS** (IN.) **x PRESSURE** (PSI)
STATIC (PARKING) TORQUE (IN.-LBS.) = **0.40 x BRAKING RADIUS** (IN.) **x PRESSURE** (PSI)
BRAKING RADIUS (IN.) = **[DISC DIAMETER ÷ 2] - 0.675**

Caliper Disc Brakes

H10 SERIES - ALUMINUM

DOUBLE ACTING

FIXED MOUNT - FIXED DISC

Accommodates disc thickness:	5/32"	1/4"
Weight	1.0 lbs.	.45 kgs.

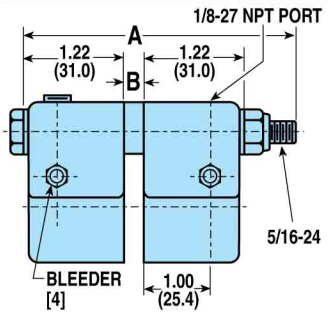

MODEL CODE	DISC THK.	A	B	OPTIONS / DESCRIPTION	ASSEMBLY NUMBER
H10DAC	5/32"	3.50"	.281"	Double Acting	0701-0010
H10DACG	5/32"	3.50"	.281"	Double Acting, EPR Seals	0701-0011
H10DARC	5/32"	3.50"	.281"	Double Acting, Retractable Pistons	0708-0010
H10DARCG	5/32"	3.50"	.281"	Double Acting, Retr Pist, EPR Seals	0708-0011
H10DBC	1/4"	3.50"	.375"	Double Acting	0702-0010
H10DBCG	1/4"	3.50"	.375"	Double Acting, EPR Seals	0702-0011
H10DBRC	1/4"	3.50"	.375"	Double Acting, Retractable Pistons	0709-0010
H10DBRCG	1/4"	3.50"	.375"	Double Acting, Retr Pist, EPR Seals	0709-0011

SINGLE ACTING

FIXED MOUNT - FLOATING DISC

Accommodates disc thickness:	5/32"	1/4"
Weight	.75 lbs.	.34 kgs.

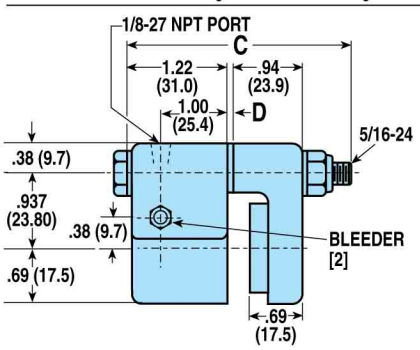

MODEL CODE	DISC THK.	C	D	OPTIONS / DESCRIPTION	ASSEMBLY NUMBER
H10SAC	5/32"	3.00"	–	Single Acting	0705-0010
H10SACG	5/32"	3.00"	–	Single Acting, EPR Seals	0705-0008
H10SBC	1/4"	3.00"	.094"	Single Acting	0703-0010

SINGLE ACTING WITH FLOATING BRACKET

FLOATING MOUNT - FIXED DISC

Accommodates disc thickness:	5/32"	1/4"
Weight	1.5 lbs.	.68 kgs.

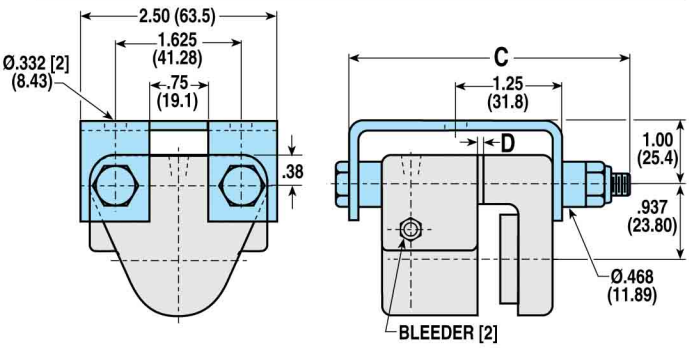

See SINGLE ACTING dimensional drawing for additional measurements

MODEL CODE	DISC THK.	C	D	OPTIONS / DESCRIPTION	ASSEMBLY NUMBER
H10SAFC	5/32"	3.75"	–	Single Acting, Floating Bracket	0705-0011
H10SAFCG	5/32"	3.75"	–	Single Acting, FtgBrkt,EPR Seals	0705-0009
H10SBFC	1/4"	3.75"	.094"	Single Acting, Floating Bracket	0703-0013

MOUNTING DIMENSIONS

Disc Diameter	**E**	6.313"	8"	10"	12"	16"
	F	3.469"	4.313"	5.313"	6.313"	8.313"
Braking Radius	**G**	2.482"	3.325"	4.325"	5.325"	7.325"

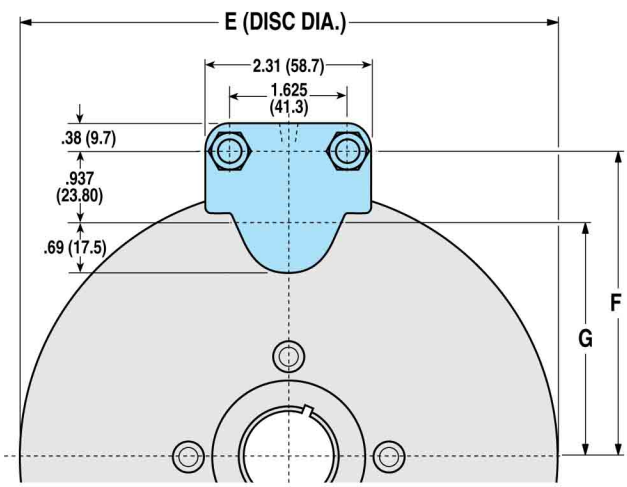

BRAKE MODEL LETTER CODES

A 5/32" Thick Disc	**D** Double Acting	**R** Retractable Piston(s)
B 1/4" Thick Disc	**F** Floating Bracket Mount	**S** Single Acting
C With Bleeder Fitting	**G** EPR Seals	
	H Hydraulic Brake	

Caliper Disc Brakes

H20 SERIES - ALUMINUM

AVAILABLE STYLES

Double Acting

FIXED MOUNT - FIXED DISC

PICTURED: 0720-0010

Single Acting

FIXED MOUNT - FLOATING DISC

PICTURED: 0724-0010

Single Acting with Floating Bracket

FLOATING MOUNT - FIXED DISC

PICTURED: 0724-0011

H20 SPECIFICATIONS

Maximum Pressure Rating:	1,000 PSI
Accommodates Tolomatic disc diameters:	6-5/16", 8", 10", 12", 16"
Maximum disc diameter:	none
Housing Material:	Extruded aluminum
Bolts:	Zinc plated grade 8
Seals:	Buna-N Standard
Wearable friction material:	0.83 cu. in.
Wearable friction material/retractable models:	0.48 cu. in.
Friction material:	Replaceable, high-grade
Total lining area:	4.00 sq. in.
Piston diameter:	1.625 in.
Fluid displacement, non-retractable:	Single acting = 0.062 cu. in. Double acting = 0.062 cu. in.
OPTIONS	
Seals:	EPR seals
Pistons:	Retractable piston(s)
Floating bracket:	Stamped steel construction

PERFORMANCE DATA

Dynamic Torque vs Pressure

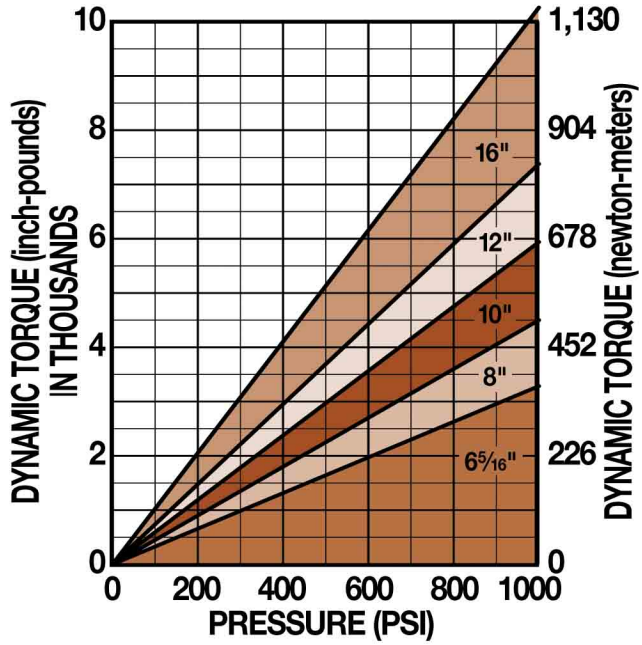

Static Torque vs Pressure

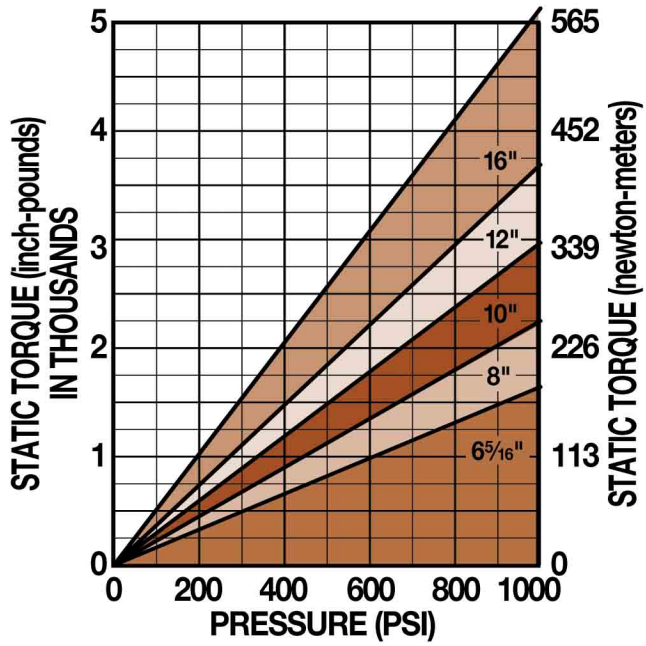

DISC SIZING EQUATIONS

DYNAMIC TORQUE (IN.-LBS.) = **1.44 x BRAKING RADIUS** (IN.) **x PRESSURE** (PSI)
STATIC (PARKING) TORQUE (IN.-LBS.) = **0.72 x BRAKING RADIUS** (IN.) **x PRESSURE** (PSI)
BRAKING RADIUS (IN.) = **[DISC DIAMETER ÷ 2] - 0.875**

Caliper Disc Brakes

H20 SERIES - ALUMINUM

DOUBLE ACTING

FIXED MOUNT - FIXED DISC

Accommodates disc thickness:	5/32"	1/4"	3/8"	1/2"
Weight	2.0 lbs.	.91 kgs.		

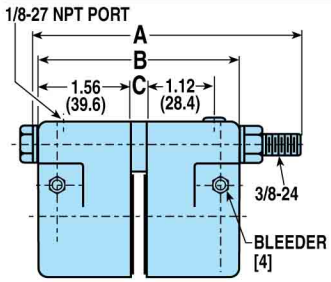

MODEL CODE	DISC THK.	A	B	C	OPTIONS / DESCRIPTION	ASSEMBLY NUMBER
H20DAC	5/32"	4.50"	3.41"	0.281"	Double Acting	0720-0010
H20DACG	5/32"	4.50"	3.41"	0.281"	Double Acting, EPR Seals	0720-0011
H20DARC	5/32"	4.50"	3.41"	0.281"	Dbl. Acting, Retractable Pistons	0728-0010
H20DARCG	5/32"	4.50"	3.41"	0.281"	Dbl. Acting, Retr Pist, EPR Seals	0728-0011
H20DBC	1/4"	4.50"	3.50"	0.375"	Double Acting	0721-0010
H20DBCG	1/4"	4.50"	3.50"	0.375"	Double Acting, EPR Seals	0721-0011
H20DBRC	1/4"	4.50"	3.50"	0.375"	Dbl. Acting, Retractable Pistons	0729-0010
H20DBRCG	1/4"	4.50"	3.50"	0.375"	Dbl. Acting, Retr Pist, EPR Seals	0729-0011
H20DLRC	3/8"	4.50"	3.62"	0.500"	Dbl. Acting, Retractable Pistons	0729-0008
H20DEC	1/2"	5.00"	3.75"	0.625"	Double Acting	0725-0010
H20DECG	1/2"	5.00"	3.75"	0.625"	Double Acting, EPR Seals	0725-0011
H20DERC	1/2"	5.00"	3.75"	0.625"	Dbl. Acting, Retractable Pistons	0719-0010
H20DERCG	1/2"	5.00"	3.75"	0.625"	Dbl. Acting, Retr Pist, EPR Seals	0719-0011

SINGLE ACTING

FIXED MOUNT - FLOATING DISC

Accommodates disc thickness:	5/32"	1/4"	3/8"
Weight	1.5 lbs.	.68 kgs.	

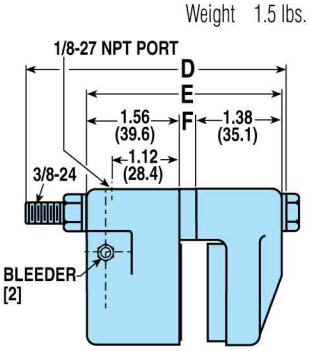

MODEL CODE	DISC THK.	D	E	OPTIONS / F	ASSEMBLY DESCRIPTION	NUMBER
H20SAC	5/32"	3.75"	2.94"	–	Single Acting	0724-0010
H20SACG	5/32"	3.75"	2.94"	–	Single Acting, EPR Seals	0724-0012
H20SBC	1/4"	3.75"	3.03"	0.093"	Single Acting	0722-0010
H20SBCG	1/4"	3.75"	3.03"	0.093"	Single Acting, EPR Seals	0722-0013
H20SLC	3/8"	4.00"	3.16"	0.219"	Single Acting	0724-0014
H20SLCG	3/8"	4.00"	3.16"	0.219"	Single Acting, EPR Seals	0724-0016

SINGLE ACTING WITH FLOATING BRACKET

FLOATING MOUNT - FIXED DISC

Accommodates disc thickness:	5/32"	1/4"
Weight	2.0 lbs.	.91 kgs.

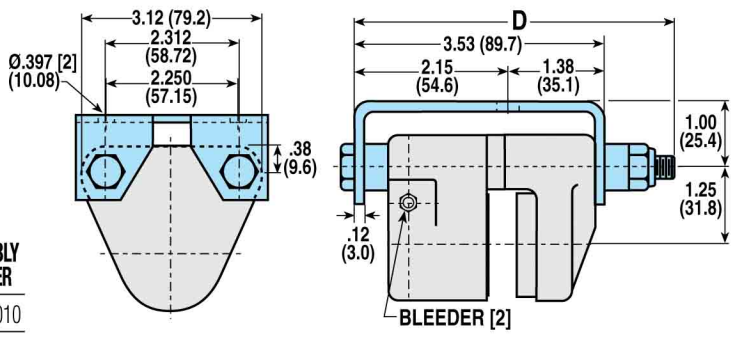

See SINGLE ACTING dimensional drawing for additional measurements

MODEL CODE	DISC THK.	D	E	F	OPTIONS / DESCRIPTION	ASSEMBLY NUMBER
H20SAFC	5/32"	4.50"	2.94"	–	Sng Act, Floating Bracket	0724-0011
H20SAFCG	5/32"	4.50"	2.94"	–	Sng Act, Fltg Brkt, EPR Seals	0724-0013
H20SBFC	1/4"	4.50"	3.03"	0.093"	Sng Act, Floating Bracket	0722-0011
H20SBFCG	1/4"	4.50"	3.03"	0.093"	Sng Act, Fltg Brkt, EPR Seals	0722-0014

MOUNTING DIMENSIONS

Disc Diameter	G	6.313"	8"	10"	12"	16"
	H	3.531"	4.375"	5.375"	6.375"	8.375"
Braking Radius	J	2.281"	3.125"	4.125"	5.125"	7.125"

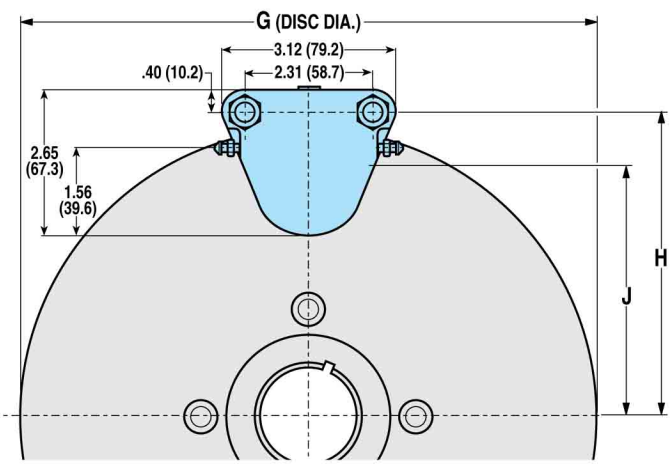

BRAKE MODEL LETTER CODES

A 5/32" Thick Disc	**E** 1/2" Thick Disc	**L** 3/8" Thick Disc
B 1/4" Thick Disc	**F** Floating Bracket Mount	**R** Retractable Piston(s)
C With Bleeder Fitting	**G** EPR Seals	**S** Single Acting
D Double Acting	**H** Hydraulic Brake	

Caliper Disc Brakes

H220 SERIES - ALUMINUM

AVAILABLE STYLES

Double Acting

FIXED MOUNT - FIXED DISC

PICTURED: 0735-0301

Single Acting

FIXED MOUNT - FLOATING DISC

PICTURED: 0733-0201

Single Acting with Floating Bracket

FLOATING MOUNT - FIXED DISC

PICTURED: 0733-0222

H220 SPECIFICATIONS

Maximum Pressure Rating:	1,500 PSI
Accommodates Tolomatic disc diameters:	6-5/16", 8", 10", 12", 16"
Maximum disc diameter:	16"
Housing Material:	Die cast aluminum
Bolts:	Zinc plated grade 8
Seals:	Buna-N Standard
Wearable friction material:	1.66 cu. in.
Wearable friction material/retractable models:	0.95 cu. in.
Friction material:	Replaceable, high-grade
Total lining area:	8.00 sq. in.
Piston diameter:	1.625 in.
Fluid displacement, non-retractable:	Single acting = 0.124 cu. in. Double acting = 0.124 cu. in.
OPTIONS	
Seals:	EPR seals
Pistons:	Retractable piston(s)
Floating bracket:	Available

PERFORMANCE DATA

Dynamic Torque vs Pressure

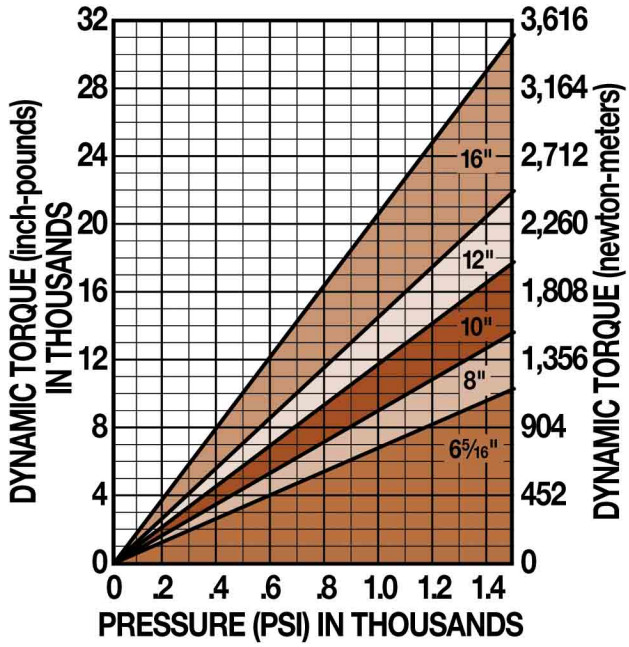

Static Torque vs Pressure

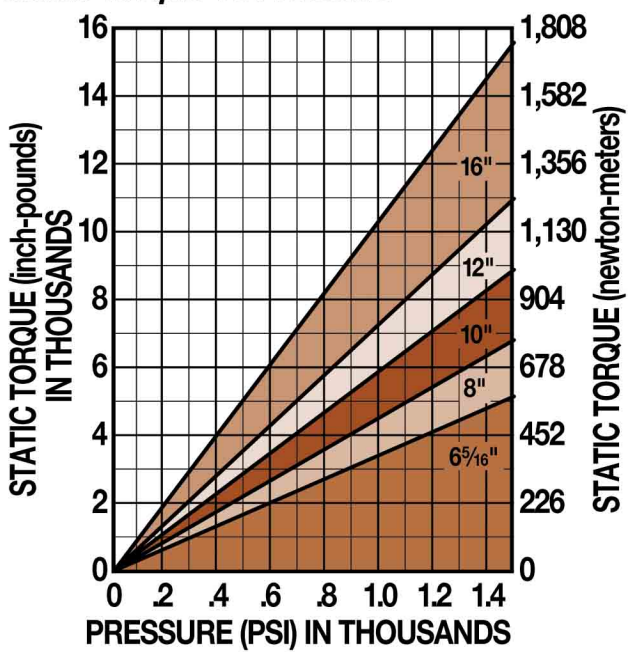

DISC SIZING EQUATIONS

DYNAMIC TORQUE (IN.-LBS.) = **2.88 x BRAKING RADIUS** (IN.) **x PRESSURE** (PSI)
STATIC (PARKING) TORQUE (IN.-LBS.) = **1.44 x BRAKING RADIUS** (IN.) **x PRESSURE** (PSI)

BRAKE MODEL LETTER CODES

A 5/32" Thick Disc
B 1/4" Thick Disc
C With Bleeder Fitting
D Double Acting
E 1/2" Thick Disc
F Floating Bracket Mount
G EPR Seals
H Hydraulic Brake
R Retractable Piston(s)
S Single Acting

Caliper Disc Brakes

H220 SERIES - ALUMINUM

DOUBLE ACTING

FIXED MOUNT - FIXED DISC

Accommodates disc thickness:	5/32"	1/4"	1/2"
Weight	4.0 lbs.	1.82 kgs.	

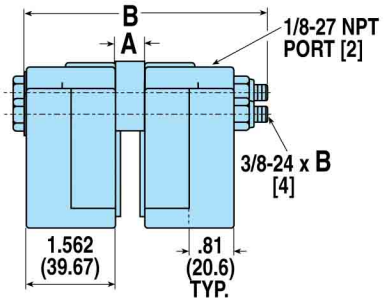

MODEL CODE	DISC THK.	A	B	OPTIONS / DESCRIPTION	ASSEMBLY NUMBER
H220DAC	5/32"	0.28"	4.50"	Double Acting	0735-0101
H220DACG	5/32"	0.28"	4.50"	Double Acting, EPR Seals	0735-0103
H220DARC	5/32"	0.28"	4.50"	Dbl Act, Retractable Pistons	0736-0111
H220DARCG	5/32"	0.28"	4.50"	Dbl Act, Retractable Pistons, EPR Seals	0736-0112
H220DBC	1/4"	0.38"	4.50"	Double Acting	0735-0201
H220DBCG	1/4"	0.38"	4.50"	Double Acting, EPR Seals	0735-0202
H220DBRC	1/4"	0.38"	4.50"	Dbl Act, Retractable Pistons	0736-0211
H220DBRCG	1/4"	0.38"	4.50"	Dbl Act, Retractable Pistons, EPR Seals	0736-0212
H220DEC	1/2"	0.62"	5.00"	Double Acting	0735-0301
H220DECG	1/2"	0.62"	5.00"	Double Acting, EPR Seals	0735-0302
H220DERC	1/2"	0.62"	5.00"	Dbl Act, Retractable Pistons	0736-0311
H220DERCG	1/2"	0.62"	5.00"	Dbl Act, Retractable Pistons, EPR Seals	0736-0312

SINGLE ACTING

FIXED MOUNT - FLOATING DISC

Accommodates disc thickness:	5/32"	1/4"	1/2"
Weight	3.0 lbs.	1.36 kgs.	

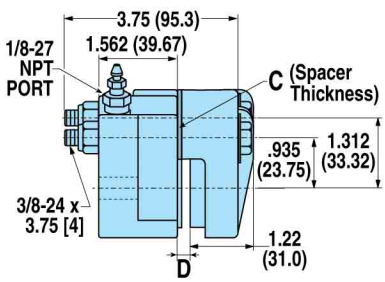

MODEL CODE	DISC THK.	C	D	OPTIONS / DESCRIPTION	ASSEMBLY NUMBER
H220SAC	5/32"	–	0.25"	Single Acting	0733-0001
H220SACG	5/32"	–	0.25"	Single Acting, EPR Seals	0733-0006
H220SBC	1/4"	0.094"	0.34"	Single Acting	0733-0101
H220SBCG	1/4"	0.094"	0.34"	Single Acting, EPR Seals	0733-0102
H220SEC	1/2"	0.344"	0.59"	Single Acting	0733-0201
H220SECG	1/2"	0.344"	0.59"	Single Acting, EPR Seals	0733-0202

SINGLE ACTING WITH FLOATING BRACKET

FLOATING MOUNT - FIXED DISC

Accommodates disc thickness:	5/32"	1/4"	1/2"
Weight	4.5 lbs.	2.04 kgs.	

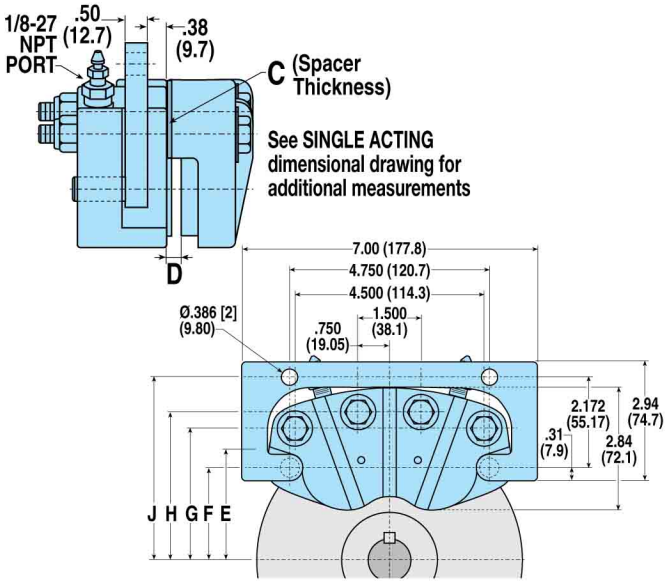

MODEL CODE	DISC THK.	C	D	OPTIONS / DESCRIPTION	ASSEMBLY NUMBER
H220SAFC	5/32"	–	0.25"	Single Acting, Floating Bracket	0733-0021
H220SAFCG	5/32"	–	0.25"	Sgl Act, Floating Bracket, EPR Seals	0733-0022
H220SBFC	1/4"	0.094"	0.34"	Sgl Act, Floating Bracket	0733-0121
H220SBFCG	1/4"	0.094"	0.34"	Sgl Act, Floating Bracket, EPR Seals	0733-0122
H220SEFC	1/2"	0.344"	0.59"	Sgl Act, Floating Bracket	0733-0221
H220SEFCG	1/2"	0.344"	0.59"	SglAct, Floating Bracket, EPR Seals	0733-0222

MOUNTING DIMENSIONS

Disc Diameter		6.313"	8"	10"	12"	16"
Braking Radius	E	2.38"	3.15"	4.11"	5.08"	7.21"
	F	2.13"	3.00"	4.00"	5.00"	7.09"
	G	3.07"	3.94"	4.94"	5.94"	8.03"
	H	3.45"	4.32"	5.32"	6.32"	8.41"
	J	4.30"	5.17"	6.17"	7.17"	9.26"

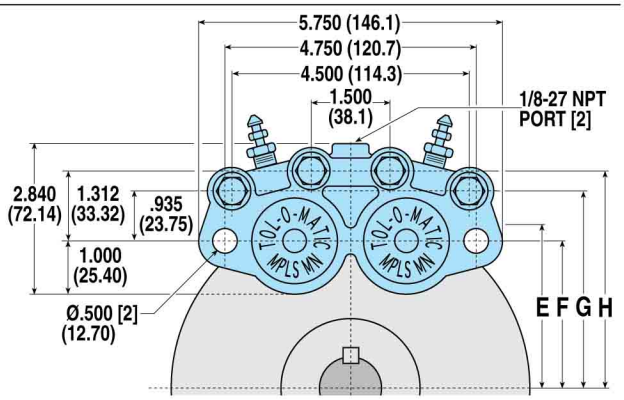

Caliper Disc Brakes

H220I SERIES - CAST IRON

AVAILABLE STYLES

Double Acting

FIXED MOUNT - FIXED DISC

PICTURED: 0735-0403

Single Acting

FIXED MOUNT - FLOATING DISC

PICTURED: 0733-0402

Single Acting with Floating Bracket

FLOATING MOUNT - FIXED DISC

PICTURED: 0733-0422

H220I SPECIFICATIONS

Maximum Pressure Rating:	1,500 PSI
Accommodates Tolomatic disc diameters:	6-5/16", 8", 10", 12", 16"
Maximum disc diameter:	16"
Housing Material:	Cast ductile iron
Bolts:	Zinc plated grade 8
Seals:	Buna-N Standard
Wearable friction material:	2.35 cu. in.
Wearable friction material/retractable models:	0.95 cu. in.
Friction material:	Replaceable, high-grade
Total lining area:	9.4 sq. in.
Piston diameter:	1.625 in.
Fluid displacement:	Single acting = 0.124 cu. in. Double acting = 0.124 cu. in.
OPTIONS	
Seals:	EPR seals
Floating bracket:	Available

PERFORMANCE DATA

Dynamic Torque vs Pressure

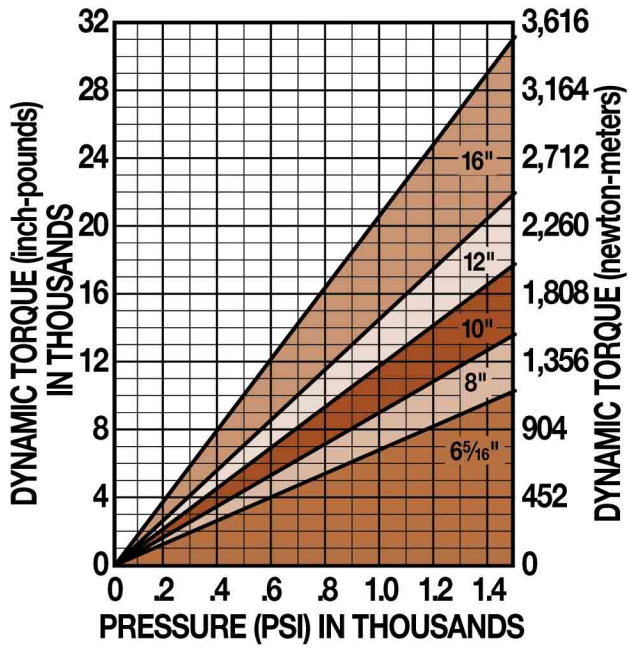

Static Torque vs Pressure

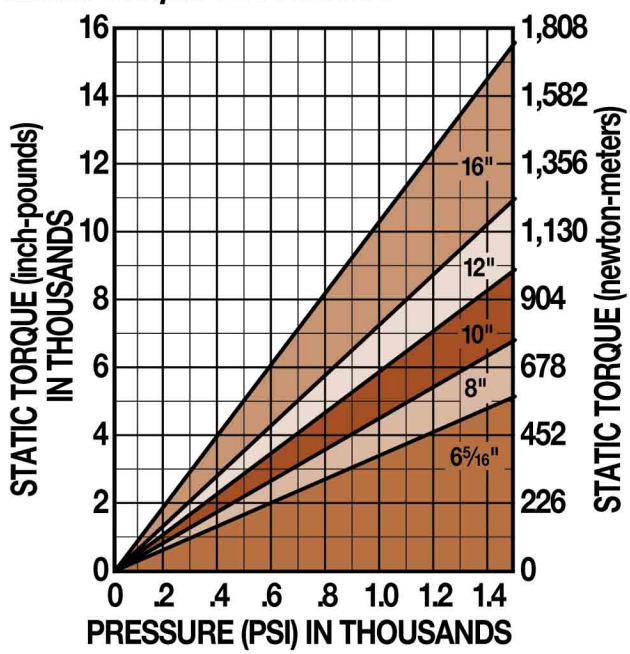

DISC SIZING EQUATIONS

DYNAMIC TORQUE (IN.-LBS.) = **2.88 x BRAKING RADIUS** (IN.) **x PRESSURE** (PSI)
STATIC (PARKING) TORQUE (IN.-LBS.) = **1.44 x BRAKING RADIUS** (IN.) **x PRESSURE** (PSI)

BRAKE MODEL LETTER CODES

A 5/32" Thick Disc	**E** 1/2" Thick Disc	**L** 3/8" Thick Disc
B 1/4" Thick Disc	**F** Floating Bracket Mount	**I** Iron
C With Bleeder Fitting	**G** EPR Seals	**S** Single Acting
D Double Acting	**H** Hydraulic Brake	

Caliper Disc Brakes

H220I SERIES - CAST IRON

DOUBLE ACTING

FIXED MOUNT - FIXED DISC

Accommodates disc thickness: 5/32" 1/4" 3/8" 1/2"

Weight 12.0 lbs. 5.40 kgs.

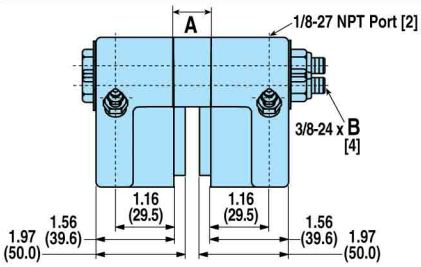

MODEL CODE	DISC THK.	A	B	OPTIONS / DESCRIPTION	ASSEMBLY NUMBER
H220DACI	5/32"	1.03"	5.00"	Double Acting, Cast Iron	0735-0403
H220DACIG	5/32"	1.03"	5.00"	Double Acting, Cast Iron, EPR Seals	0735-0407
H220DBCI	1/4"	1.12"	5.00"	Double Acting, Cast Iron	0735-0404
H220DBCIG	1/4"	1.12"	5.00"	Double Acting, Cast Iron, EPR Seals	0735-0408
H220DLCI	3/8"	1.25"	5.50"	Double Acting, Cast Iron	0735-0405
H220DLCIG	3/8"	1.25"	5.50"	Double Acting, Cast Iron, EPR Seals	0735-0409
H220DECI	1/2"	1.38"	6.00"	Double Acting, Cast Iron	0735-0406
H220DECIG	1/2"	1.38"	6.00"	Double Acting, Cast Iron, EPR Seals	0735-0410

SINGLE ACTING

FIXED MOUNT - FLOATING DISC

Accommodates disc thickness: 5/32" 1/4" 1/2"

Weight 9.0 lbs. 4.08 kgs.

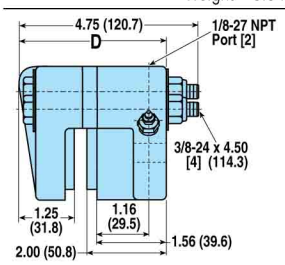

MODEL CODE	DISC THK.	D	OPTIONS / DESCRIPTION	ASSEMBLY NUMBER
H220SACI	5/32"	3.45"	Single Acting, Cast Iron	0733-0402
H220SACIG	5/32"	3.45"	Single Acting, Cast Iron, EPR Seals	0733-0406
H220SBCI	1/4"	3.54"	Single Acting, Cast Iron	0733-0403
H220SBCIG	1/4"	3.54"	Single Acting, Cast Iron, EPR Seals	0733-0407
H220SLCI	3/8"	3.67"	Single Acting, Cast Iron	0733-0404
H220SLCIG	3/8"	3.67"	Single Acting, Cast Iron, EPR Seals	0733-0408
H220SECI	1/2"	3.79"	Single Acting, Cast Iron	0733-0405
H220SECIG	1/2"	3.79"	Single Acting, Cast Iron, EPR Seals	0733-0409
Call FACTORY for dimensions for the following models:				
H220SOIC	1-1/4"		Single Acting, Cast Iron	0733-0226
H220SOICG	1-1/4"		Single Acting, Cast Iron, EPR Seals	0733-0227

SINGLE ACTING WITH FLOATING BRACKET

FLOATING MOUNT - FIXED DISC

Accommodates disc thickness: 5/32" 1/4" 1/2"

Weight 10.5 lbs. 4.76 kgs.

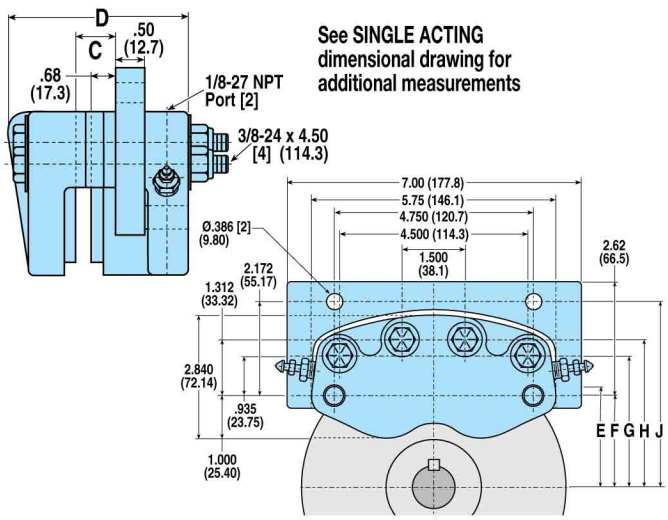

MODEL CODE	DISC THK.	C	D	OPTIONS / DESCRIPTION	ASSEMBLY NUMBER
H220SAFCI	5/32"	.83"	3.45"	Sgl Act, Floating Bracket, Cast Iron	0733-0422
H220SAFCIG	5/32"	.83"	3.45"	SglAct, Ftg Bkt, Iron, EPR Seals	0733-0426
H220SBFCI	1/4"	.92"	3.54"	Sgl Act, Floating Bracket, Cast Iron	0733-0423
H220SBFCIG	1/4"	.92"	3.54"	SglAct, Ftg Bkt, Iron, EPR Seals	0733-0427
H220SLFCI	3/8"	1.05"	3.67"	Sgl Act, Floating Bracket, Cast Iron	0733-0424
H220SLFCIG	3/8"	1.05"	3.67"	Sgl Act, Ftg Bkt, Iron, EPR Seals	0733-0428
H220SEFCI	1/2"	1.17"	3.79"	Sgl Act, Floating Bracket, Cast Iron	0733-0425
H220SEFCIG	1/2"	1.17"	3.79"	Sgl Act, Ftg Bkt, Iron, EPR Seals	0733-0429

MOUNTING DIMENSIONS

Disc Diameter		6.313"	8"	10"	12"	16"
Braking Radius	E	2.38"	3.15"	4.11"	5.08"	7.21"
	F	2.13"	3.00"	4.00"	5.00"	7.09"
	G	3.07"	3.94"	4.94"	5.94"	8.03"
	H	3.45"	4.32"	5.32"	6.32"	8.41"
	J	4.30"	5.17"	6.17"	7.17"	9.26"

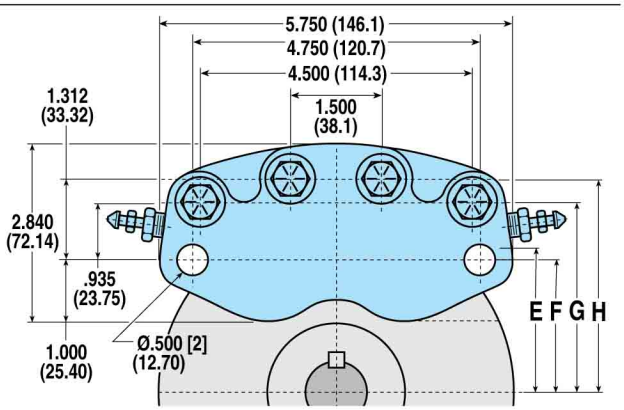

Caliper Disc Brakes

H441 SERIES - DUCTILE IRON

AVAILABLE STYLES

Double Acting

FIXED MOUNT - FIXED DISC

PICTURED: 0774-0000

H441 SPECIFICATIONS

Maximum Pressure Rating:	1,500 PSI
Accommodates Tolomatic disc diameters:	10", 12", 16"
Maximum disc diameter:	none
Housing Material:	Cast ductile iron
Bolts:	Zinc plated grade 5
Seals:	Buna-N Standard
Wearable friction material:	3.71 cu. in.
Friction material:	Replaceable, high-grade
Total lining area:	9.14 sq. in.
Piston diameter:	2.50 in.
Fluid displacement: for .03 inch clearance	Double acting = 0.147 cu. in.
Maximum combined allowable wear:	0.812 in.
OPTIONS	
Seals:	EPR seals
Friction material:	Sintered metallic

BRAKE MODEL LETTER CODES

D Double Acting	**G** EPR Seals	**H** Hydraulic Brake

PERFORMANCE DATA

Dynamic Torque vs Pressure

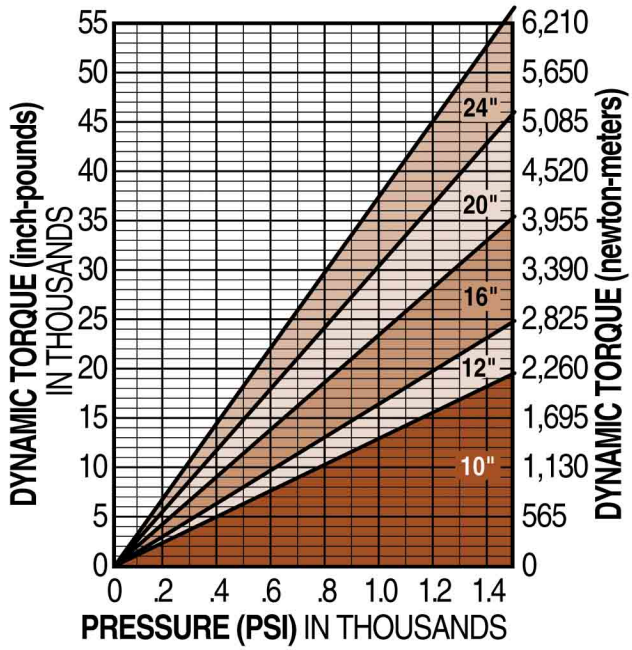

Static Torque vs Pressure

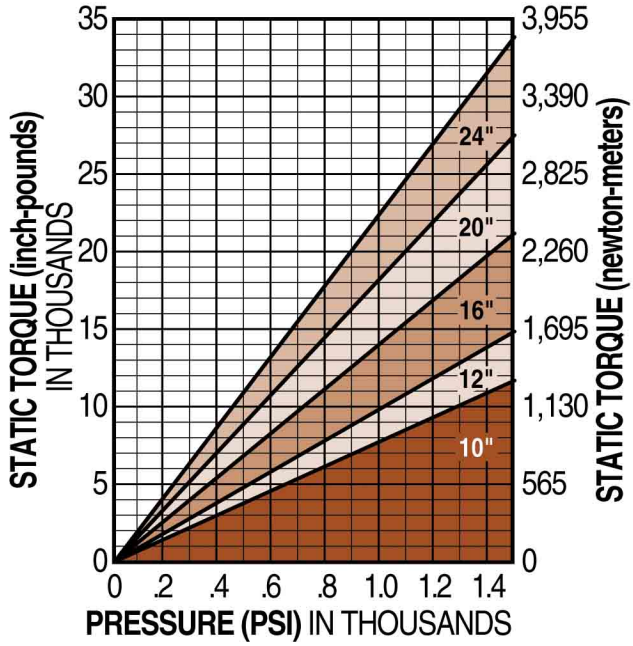

DISC SIZING EQUATIONS

DYNAMIC TORQUE (IN.-LBS.) = **3.53 x BRAKING RADIUS** (IN.) **x PRESSURE** (PSI)
STATIC (PARKING) TORQUE (IN.-LBS.) = **2.11 x BRAKING RADIUS** (IN.) **x PRESSURE** (PSI)
BRAKING RADIUS (IN.) = **[DISC DIAMETER ÷ 2] - 1.31**

Caliper Disc Brakes

H441 SERIES - DUCTILE IRON

DOUBLE ACTING

FIXED MOUNT - FIXED DISC

Accommodates disc thickness:	N/A
Weight	17.0 lbs.7.71 kgs.

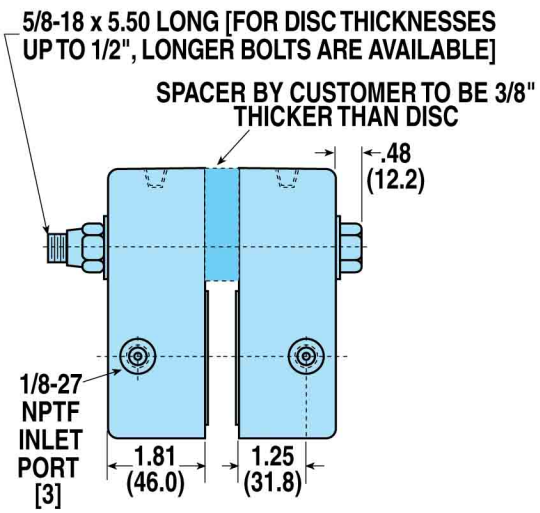

MODEL CODE	DISC THK.	OPTIONS / DESCRIPTION	ASSEMBLY NUMBER
H441D	N/A	Double Acting	0774-0000
H441DG	N/A	Double Acting, EPR Seals	0774-0001
SH441D	N/A	Double Acting, w/Sintered Metal Pads	0774-0002
SH441DG	N/A	Double Acting, EPR Seals, w/Sintered Metal Pads	0774-0003

MOUNTING DIMENSIONS

Disc Diameter		10"	12"	16"	20"	24"
	A	5.69"	6.69"	8.69"	10.69"	12.69"
Braking Radius	B	3.69"	4.69"	6.69"	8.69"	10.69"

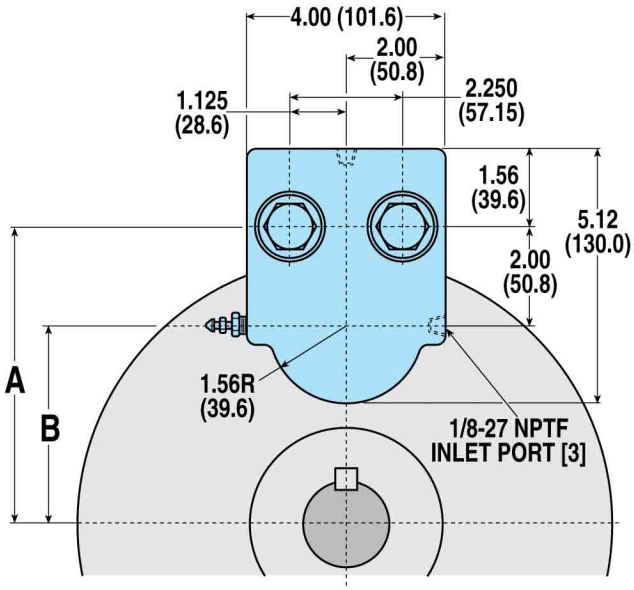

Caliper Disc Brakes

H960 SERIES - DUCTILE IRON

AVAILABLE STYLES

Double Acting

FIXED MOUNT - FIXED DISC

PICTURED: 0778-0003

H960 SPECIFICATIONS

Maximum Pressure Rating:	1,500 PSI (intermittent duty) 1,000 PSI (continuous duty)
Accommodates Tolomatic disc diameters:	12", 16"
Maximum disc diameter:	18"
Housing Material:	Cast ductile iron
Bolts:	Parkerized grade 5
Seals:	Buna-N Standard
Wearable friction material:	8.00 cu. in.
Friction material:	Replaceable, high-grade
Total lining area:	32.0 sq. in.
Piston diameter:	3.50 in.
Fluid displacement:	Double acting = 0.576 cu. in.
Maximum combined allowable wear:	0.50 in.
OPTIONS	
Seals:	EPR seals
Seals:	Viton® seals

BRAKE MODEL LETTER CODES

C With Bleeder Fitting	**H** Hydraulic Brake	**V** Viton® Seals
D Double Acting	**I** Iron	**X** Non-standard Disc Thickness
E 1/2" Thick Disc	**N** 1" Thick Disc	
G EPR Seals		

PERFORMANCE DATA

Dynamic Torque vs Pressure

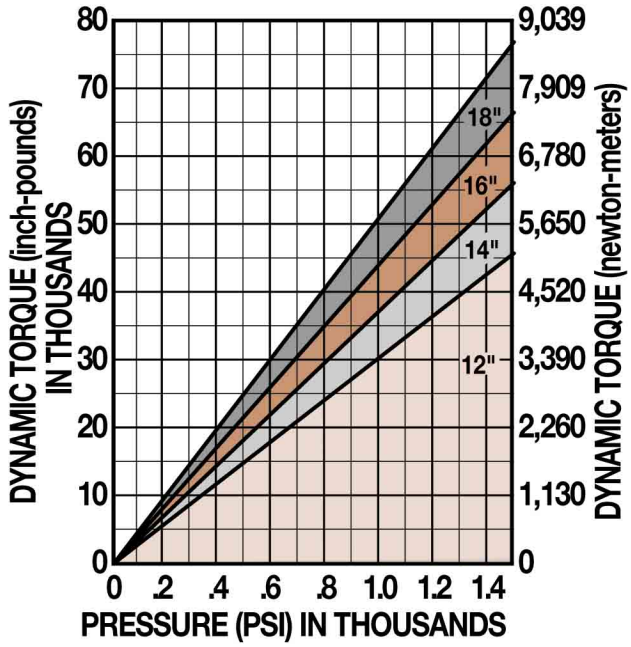

Static Torque vs Pressure

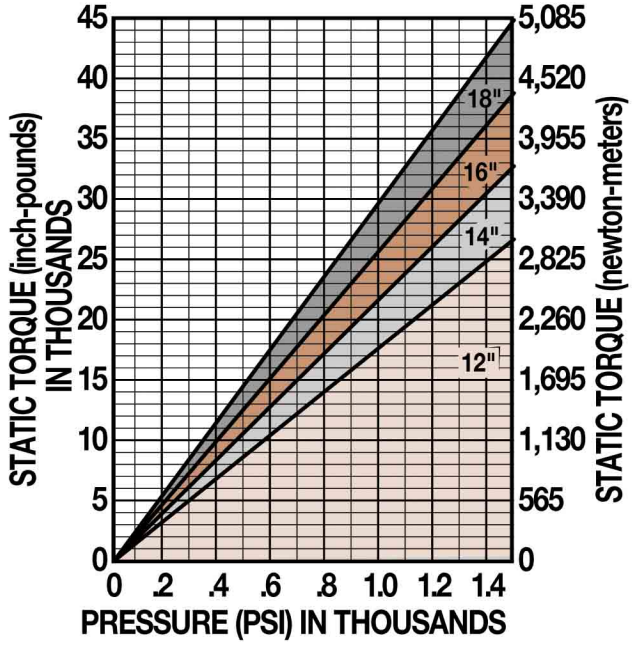

DISC SIZING EQUATIONS

DYNAMIC TORQUE (IN.-LBS.) = **6.92 x BRAKING RADIUS** (IN.) **x PRESSURE** (PSI)
STATIC (PARKING) TORQUE (IN.-LBS.) = **4.04 x BRAKING RADIUS** (IN.) **x PRESSURE** (PSI)
BRAKING RADIUS (IN.) = **[DISC DIAMETER ÷ 2] - 1.60**

Caliper Disc Brakes

H960 SERIES - DUCTILE IRON

DOUBLE ACTING

FIXED MOUNT - FIXED DISC

Accommodates disc thickness:	3/16"	1/2"	1"	1-1/8"
Weight	35.0 lbs.	15.88 kgs.		

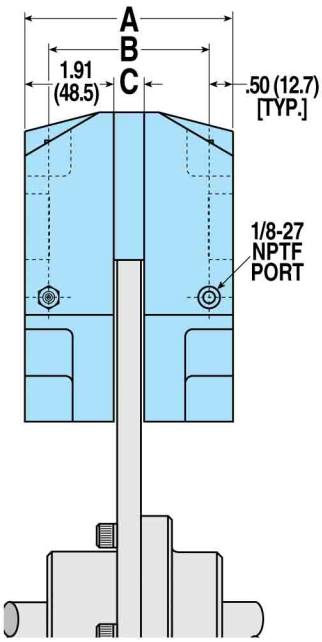

MOUNTING DIMENSIONS

Disc Diameter		12"	14"	16"	18"
	D	6.712"	7.712"	8.712"	9.712"
Braking Radius	E	4.40"	5.40"	6.40"	7.40"

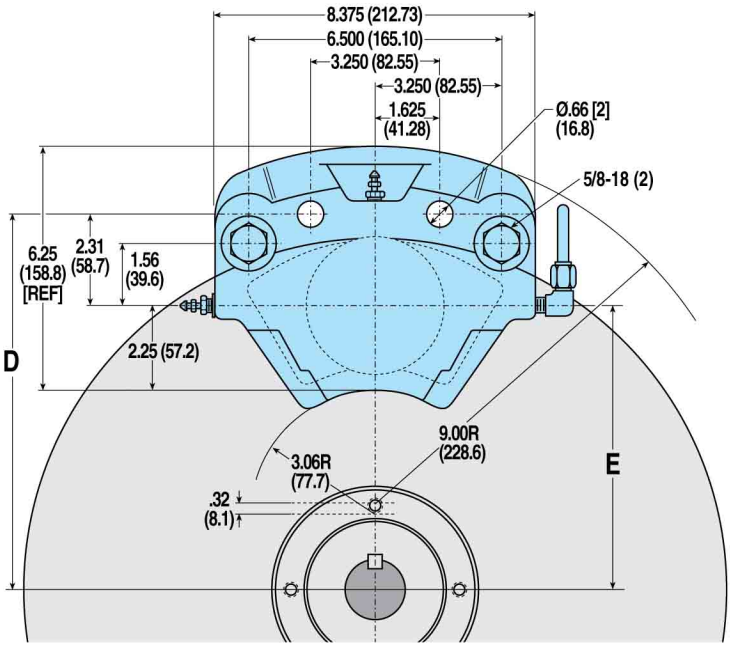

MODEL CODE	DISC THK.	A	B	C	OPTIONS / DESCRIPTION	ASSEMBLY NUMBER
H960DXCI	3/16"	4.13"	3.13"	.31"	Double Acting, Iron	0778-0012
H960DECI	1/2"	4.44"	3.44"	.63"	Double Acting, Iron	0778-0003
H960DECIG	1/2"	4.44"	3.44"	.63"	Double Acting, Iron, EPR Seals	0778-0004
H960DEVI	1/2"	4.44"	3.44"	.63"	Double Acting, Iron, Viton® Seals	0778-0005
H960DNCI	1"	4.94"	3.94"	1.13"	Double Acting, Iron	0778-0011
H960DXI	1-1/8"	5.07"	4.07"	1.26"	Double Acting, Iron	0778-0000

Viton® is a registered trademark of the E.I. Du Pont de Newmours Co., www.dupont.com

Caliper Disc Brakes

H/ME20 SERIES - ALUMINUM

AVAILABLE STYLES

"L" Long Lever (3.50") Single Acting

FIXED MOUNT - FLOATING DISC

PICTURED: 0755-0360

"L" Long Lever (3.50") Single Acting with Floating Bracket

FLOATING MOUNT - FIXED DISC

PICTURED: 0755-0260

"M" Machined Cam Lever (1.75") Single Acting

FIXED MOUNT - FLOATING DISC

PICTURED: 0755-0300

"M" Machined Cam Lever (1.75") Single Acting with Floating Bracket

FLOATING MOUNT - FIXED DISC

PICTURED: 0755-0200

"S" Short Lever (1.75") Single Acting

FIXED MOUNT - FLOATING DISC

PICTURED: 0755-0330

"S" Short Lever (1.75") Single Acting with Floating Bracket

FLOATING MOUNT - FIXED DISC

PICTURED: 0755-0230

H/ME20 SPECIFICATIONS

Maximum Hydraulic Pressure Rating:	1,000 PSI
Maximum lever force "L" Long Lever:	225 Lbs.
Maximum lever force "M" & "S" Levers:	450 Lbs.
Accommodates Tolomatic disc diameters:	6-5/16", 8", 10", 12", 16"
Maximum disc diameter:	none
Housing Material:	Cast aluminum
Bolts:	Zinc plated grade 5
Seals:	EPR seals Standard
Wearable friction material:	0.83 cu. in.
Friction material:	Replaceable, high-grade
Total lining area:	4.00 sq. in.
Piston diameter:	1.625 in.
Fluid displacement, non-retractable:	Single acting = 0.062 cu. in.
OPTIONS	
Seals:	Buna-N seals
Floating bracket:	Stamped steel construction

MOUNTING DIMENSIONS

Disc Diameter		6.313"	8"	10"	12"	16"
	D	3.531"	4.375"	5.375"	6.375"	8.375"
Braking Radius	E	2.281"	3.125"	4.125"	5.125"	7.125"

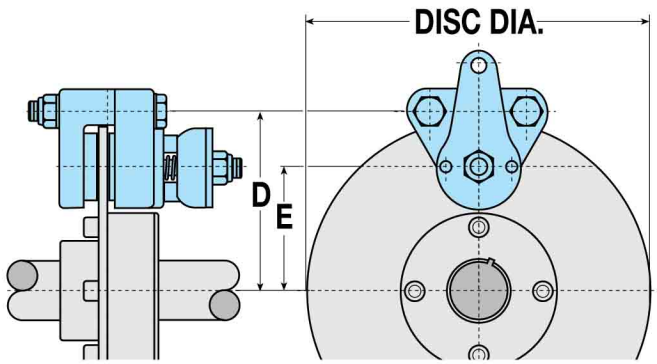

DISC SIZING EQUATIONS

HYDRAULIC:

DYNAMIC TORQUE (IN.-LBS.) = **1.44 x BRAKING RADIUS** (IN.) **x PRESSURE** (PSI)
STATIC (PARKING) TORQUE (IN.-LBS.) = **0.72 x BRAKING RADIUS** (IN.) **x PRESSURE** (PSI)

"L" LONG LEVER (3.50"):

DYNAMIC TORQUE (IN.-LBS.) = **5.38 x BRAKING RADIUS** (IN.) **x LEVER FORCE** (LBS.)
STATIC (PARKING) TORQUE (IN.-LBS.) = **2.69 x BRAKING RADIUS** (IN.) **x LEVER FORCE** (LBS.)

"M" MACHINED CAM (1.75") & "S" SHORT LEVER (1.75"):

DYNAMIC TORQUE (IN.-LBS.) = **2.69 x BRAKING RADIUS** (IN.) **x LEVER FORCE** (LBS.)
STATIC (PARKING) TORQUE (IN.-LBS.) = **1.345 x BRAKING RADIUS** (IN.) **x LEVER FORCE** (LBS.)

BRAKING RADIUS (IN.) = **[DISC DIAMETER ÷ 2] - 0.875**

Caliper Disc Brakes

H/ME20 SERIES - ALUMINUM

PERFORMANCE DATA

Hydraulic - Dynamic Torque vs Pressure

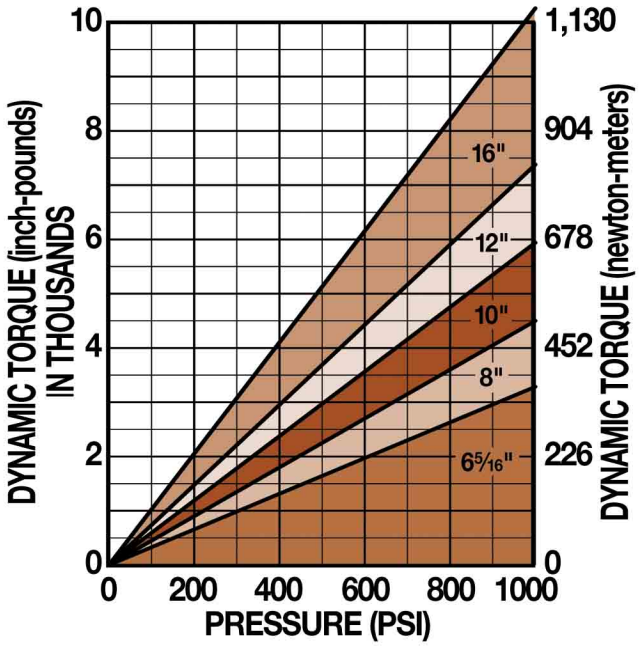

Mechanical - Dynamic Torque vs Lever Force

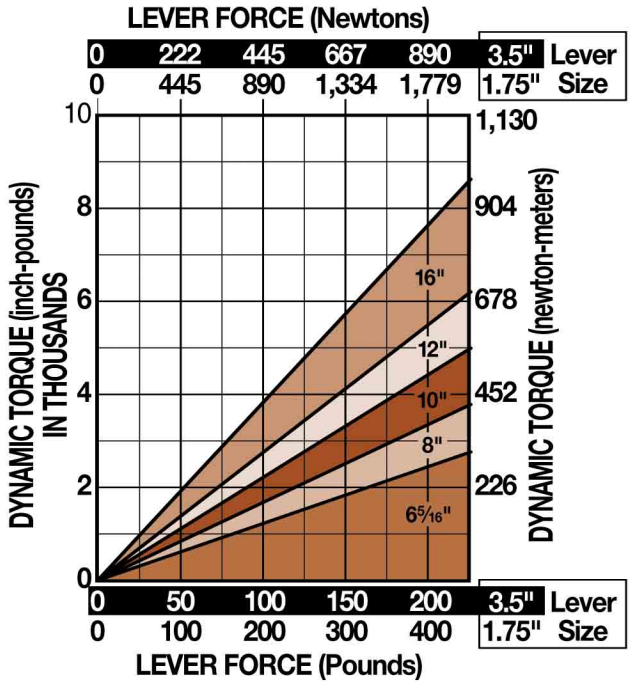

Hydraulic - Static Torque vs Pressure

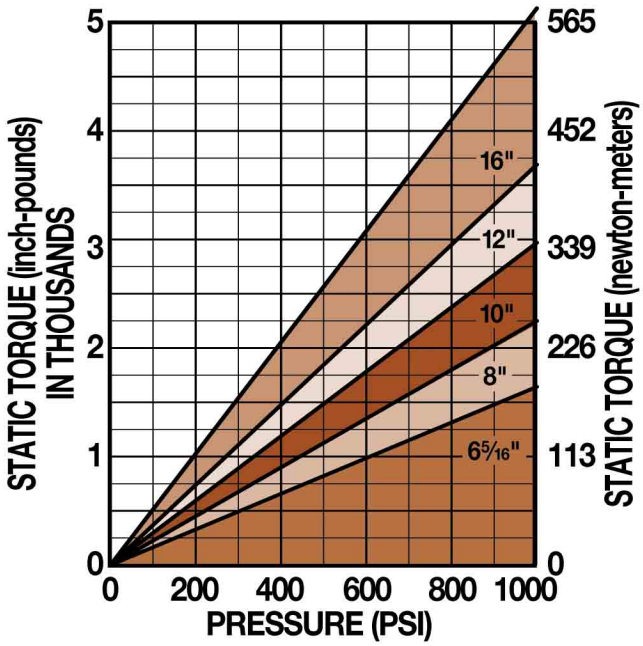

Mechanical - Static Torque vs Lever Force

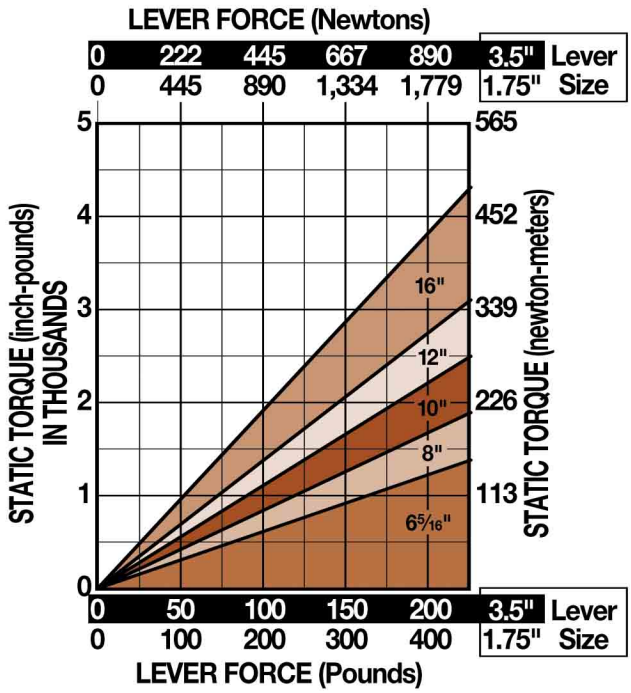

Caliper Disc Brakes

H/ME20 SERIES - ALUMINUM

"L" LONG LEVER - SINGLE ACTING

FIXED MOUNT - FLOATING DISC

Accommodates disc thickness:	5/32"	1/4"
Weight	1.5 lbs.	.68 kgs.

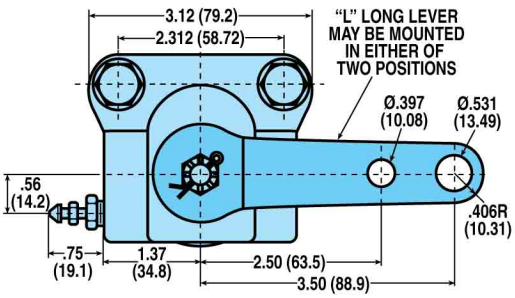

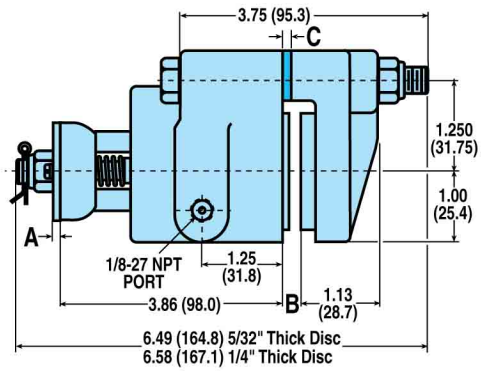

MODEL CODE	DISC THK.	A	B	C	OPTIONS / DESCRIPTION	ASSEMBLY NUMBER
H/ME20LAC	5/32"	.164"	.25"	–	Long Cam, Buna N Seals	0755-0360
H/ME20LACG	5/32"	.164"	.25"	–	Long Cam	0755-0660
H/ME20LBC	1/4"	.164"	.34"	.094"	Long Cam, Buna N Seals	0755-0370
H/ME20LBCG	1/4"	.164"	.34"	.094"	Long Cam	0755-0670

"L" LONG LEVER - SINGLE ACTING WITH FLOATING BRACKET

FLOATING MOUNT - FIXED DISC

Accommodates disc thickness:	5/32"	1/4"
Weight	2.25 lbs.	1.02 kgs.

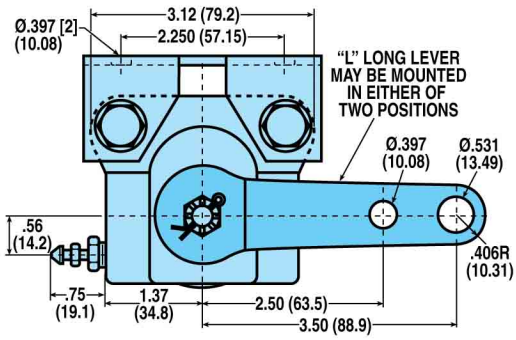

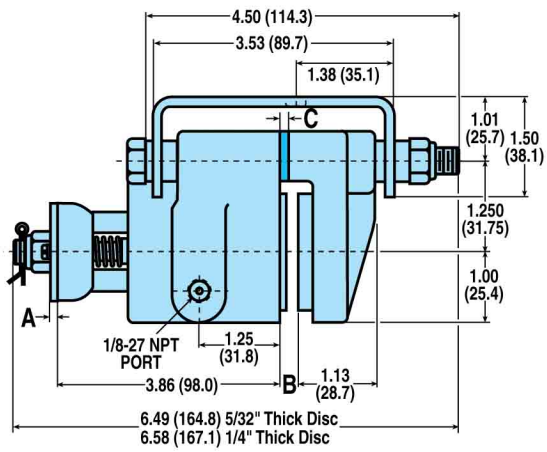

MODEL CODE	DISC THK.	A	B	C	OPTIONS / DESCRIPTION	ASSEMBLY NUMBER
H/ME20LAFC	5/32"	.164"	.25"	–	Long Cam, Fltng Brkt, Buna N	0755-0260
H/ME20LAFCG	5/32"	.164"	.25"	–	Long Cam, Fltng Brkt	0755-0560
H/ME20LBFC	1/4"	.164"	.34"	.094"	Long Cam, Fltng Brkt, Buna N	0755-0270
H/ME20LBFCG	1/4"	.164"	.34"	.094"	Long Cam, Fltng Brkt,	0755-0570

CAM TRAVEL DATA

1. 15° maximum travel when linings are new and with 1/32" gap each side of disc.
2. Periodic tightening of lock nut will reduce travel of lever and will allow 1/4" wear on each lining.
3. 90° maximum travel after 3/16" wear on each lining without intermediate tightening of lock nut.

BRAKE MODEL LETTER CODES

A 5/32" Thick Disc	**G** EPR Seals	**ME** Mechanical Brake
B 1/4" Thick Disc	**H** Hydraulic Brake	**S** Short Cam (ME Brakes)
C With Bleeder Fitting	**L** Long Cam (ME Brakes)	
F Floating Bracket Mount	**M** Machined Cam (ME Brakes)	

Caliper Disc Brakes

H/ME20 SERIES - ALUMINUM

"M" MACHINED CAM - SINGLE ACTING

FIXED MOUNT - FLOATING DISC

Accommodates disc thickness:	5/32"	1/4"
Weight	1.5 lbs.	.68 kgs.

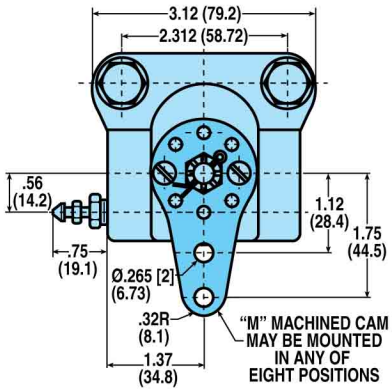

See "L" LONG LEVER SINGLE ACTING dimensional drawing for additional measurements

MODEL CODE	DISC THK.	A	B	C	OPTIONS / DESCRIPTION	ASSEMBLY NUMBER
H/ME20MAC	5/32"	.105"	.25"	–	Machined Cam, Buna N Seals	0755-0300
H/ME20MACG	5/32"	.105"	.25"	–	Machined Cam	0755-0600
H/ME20MBC	1/4"	.105"	.34"	.094"	Machined Cam, Buna N Seals	0755-0310
H/ME20MBCG	1/4"	.105"	.34"	.094"	Machined Cam	0755-0610

"S" SHORT LEVER - SINGLE ACTING

FIXED MOUNT - FLOATING DISC

Accommodates disc thickness:	5/32"	1/4"
Weight	1.5 lbs.	.68 kgs.

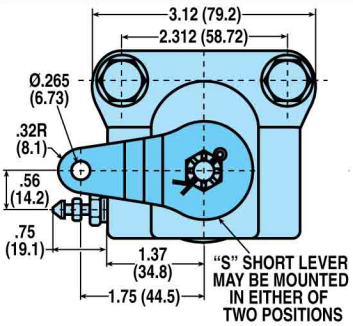

See "L" LONG LEVER SINGLE ACTING dimensional drawing for additional measurements

MODEL CODE	DISC THK.	A	B	C	OPTIONS / DESCRIPTION	ASSEMBLY NUMBER
H/ME20SAC	5/32"	.164"	.25"	–	Short Cam, Buna N Seals	0755-0330
H/ME20SACG	5/32"	.164"	.25"	–	Short Cam	0755-0630
H/ME20SBC	1/4"	.164"	.34"	.094"	Short Cam, Buna N Seals	0755-0340
H/ME20SBCG	1/4"	.164"	.34"	.094"	Short Cam	0755-0640

"M" MACHINED CAM - SINGLE ACTING WITH FLOATING BRACKET

FLOATING MOUNT - FIXED DISC

Accommodates disc thickness:	5/32"	1/4"
Weight	2.25 lbs.	1.02 kgs.

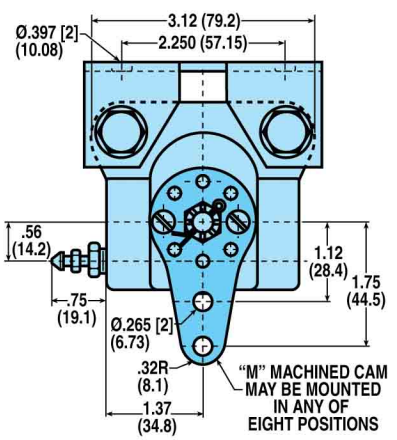

See "L" LONG LEVER SINGLE ACTING WITH FLOATING BRACKET dimensional drawing for additional measurements

MODEL CODE	DISC THK.	A	B	C	OPTIONS / DESCRIPTION	ASSEMBLY NUMBER
H/ME20MAFC	5/32"	.105"	.25"	–	Mach Cam, Fltng Brkt, Buna N	0755-0200
H/ME20MAFCG	5/32"	.105"	.25"	–	Mach Cam, Fltng Brkt	0755-0500
H/ME20MBFC	1/4"	.105"	.34"	.094"	Mach Cam, Fltng Brkt, Buna N	0755-0210
H/ME20MBFCG	1/4"	.105"	.34"	.094"	Mach Cam, Fltng Brkt	0755-0510

"S" SHORT LEVER - SINGLE ACTING WITH FLOATING BRACKET

FLOATING MOUNT - FIXED DISC

Accommodates disc thickness:	5/32"	1/4"
Weight	2.25 lbs.	1.02 kgs.

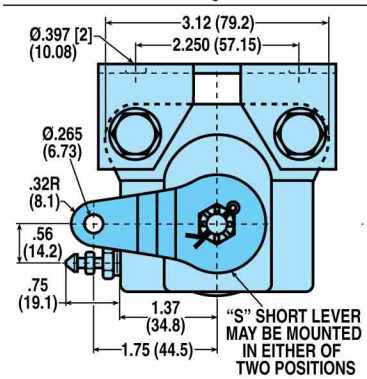

See "L" LONG LEVER SINGLE ACTING WITH FLOATING BRACKET dimensional drawing for additional measurements

MODEL CODE	DISC THK.	A	B	C	OPTIONS / DESCRIPTION	ASSEMBLY NUMBER
H/ME20SAFC	5/32"	.164"	.25"	–	Short Cam, Fltng Brkt, Buna N	0755-0230
H/ME20SAFCG	5/32"	.164"	.25"	–	Short Cam, Fltng Brkt	0755-0530
H/ME20SBFC	1/4"	.164"	.34"	.094"	Short Cam, Fltng Brkt, Buna N	0755-0240
H/ME20SBFCG	1/4"	.164"	.34"	.094"	Short Cam, Fltng Brkt	0755-0540

Caliper Disc Brakes

H/ME220 SERIES - ALUMINUM

AVAILABLE STYLES

Single Acting with Float Pin Holes

FIXED MOUNT - FLOATING DISC or FLOATING MOUNT - FIXED DISC

PICTURED: 0744-0630

H/ME220 SPECIFICATIONS

Maximum Hydraulic Pressure Rating:	1,500 PSI
Maximum lever force:	580 Lbs.
Accommodates Tolomatic disc diameters:	6-5/16", 8", 10", 12", 16"
Maximum disc diameter:	16"
Housing Material:	Cast aluminum
Bolts:	Zinc plated grade 8
Seals:	EPR Standard
Wearable friction material:	1.66 cu. in.
Friction material:	Replaceable, high-grade
Total lining area:	8.00 sq. in.
Piston diameter:	1.625 in.
Fluid displacement:	Single acting = 0.124 cu. in.
OPTIONS	
Seals:	Buna-N seals

CAM TRAVEL DATA

1. Gap between lining faces and disc when new = .048" total.
2. Angular movement required to actuate brake when new = 7° 30".
3. Maximum axial movement without intermediate adjustment = .387".
4. Wear allowed before adjustment .104" each side.

PERFORMANCE DATA

Hydraulic - Dynamic Torque vs Pressure

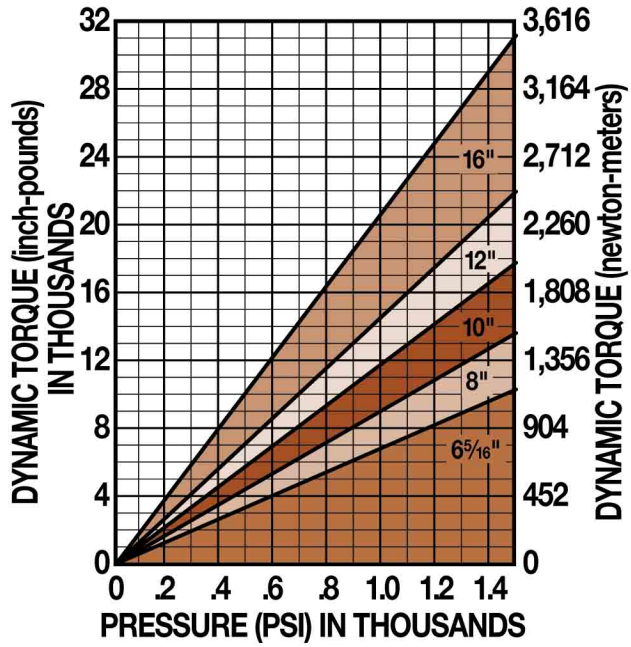

Hydraulic - Static Torque vs Pressure

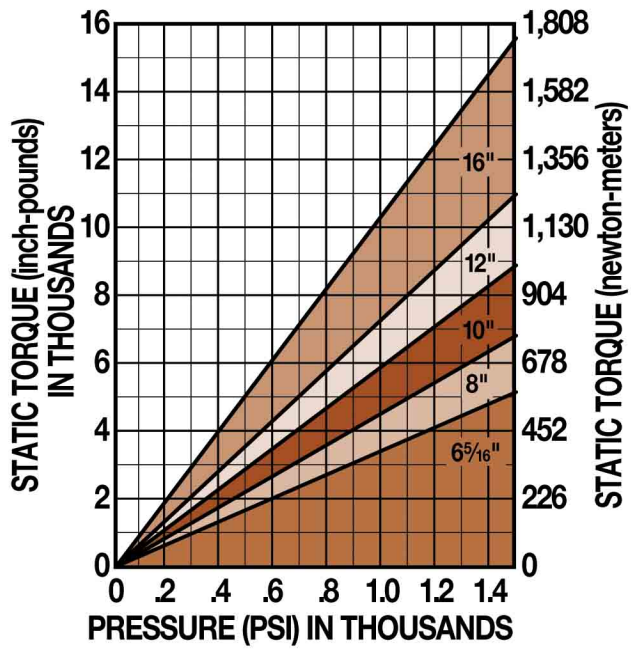

DISC SIZING EQUATIONS

HYDRAULIC:

DYNAMIC TORQUE (IN.-LBS.) = **2.88 x BRAKING RADIUS** (IN.) **x PRESSURE** (PSI)
STATIC (PARKING) TORQUE (IN.-LBS.) = **1.44 x BRAKING RADIUS** (IN.) **x PRESSURE** (PSI)

MECHANICAL:

DYNAMIC TORQUE (IN.-LBS.) = **7.45 x BRAKING RADIUS** (IN.) **x LEVER FORCE** (LBS.)
STATIC (PARKING) TORQUE (IN.-LBS.) = **3.725 x BRAKING RADIUS** (IN.) **x LEVER FORCE** (LBS.)

Caliper Disc Brakes

H/ME220 SERIES - ALUMINUM

PERFORMANCE DATA

Mechanical - Dynamic Torque vs Lever Force

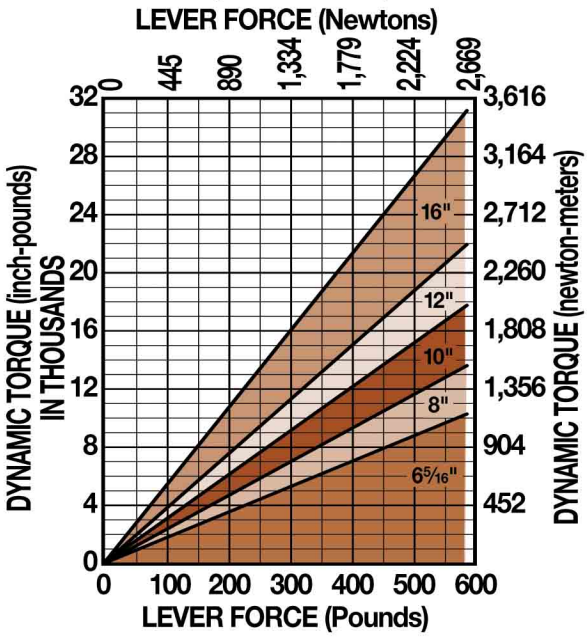

Mechanical - Static Torque vs Lever Force

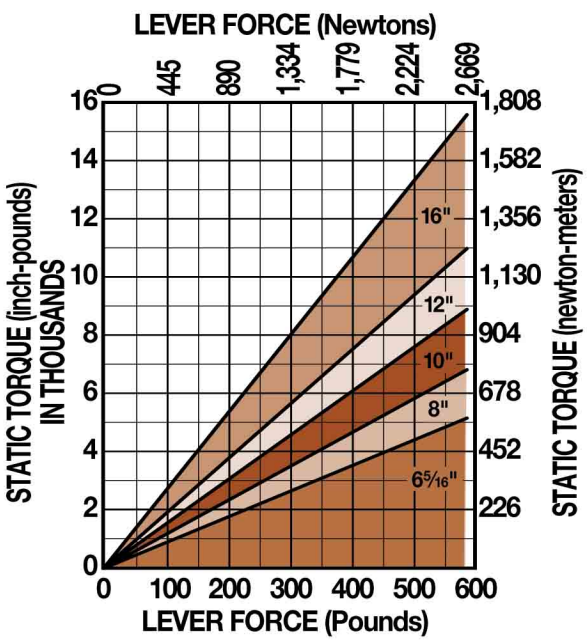

BRAKE MODEL LETTER CODES

A 5/32" Thick Disc	**F** Floating Bracket Mount	**M** Machined Cam (ME Brakes)
B 1/4" Thick Disc	**G** EPR Seals	**ME** Mechanical Brake
C With Bleeder Fitting	**H** Hydraulic Brake	**S** Short Cam (ME Brakes)
E 1/2" Thick Disc	**L** 3/8" Thick Disc	

SINGLE ACTING WITH FLOAT PIN HOLES

FIXED MOUNT - FLOATING DISC or FLOATING MOUNT - FIXED DISC

Accommodates disc thickness:	5/32"	1/4"	3/8"	1/2"
Weight	6.00 lbs.		2.72 kgs.	

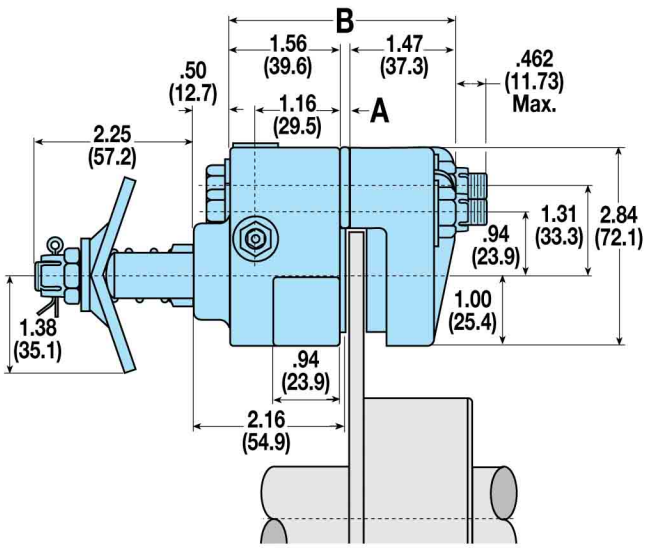

MODEL CODE	DISC THK.	A	B	OPTIONS / DESCRIPTION	ASSEMBLY NUMBER
H/ME220ACG	5/32"	.094"	3.124"	Hyd./Mech. Brake	0744-0630
H/ME220BCG	1/4"	.188"	3.218"	Hyd./Mech. Brake	0744-0640
H/ME220LCG	3/8"	.313"	3.343"	Hyd./Mech. Brake	0744-0650
H/ME220ECG	1/2"	.438"	3.468"	Hyd./Mech. Brake	0744-0660

MOUNTING DIMENSIONS

Disc Diameter		6.313"	8"	10"	12"	16"
Braking Radius	**C**	2.13"	3.00"	4.00"	5.00"	7.03"

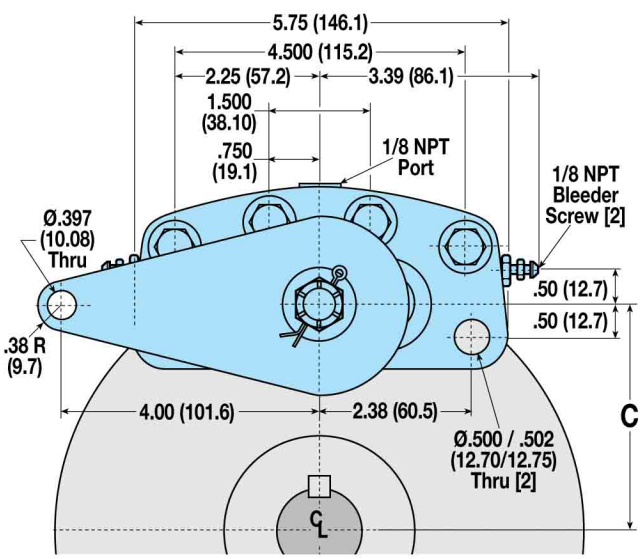

Caliper Disc Brakes

ME10 SERIES - ALUMINUM

AVAILABLE STYLES

"L" Long Lever (3.50") Single Acting

FIXED MOUNT - FLOATING DISC

PICTURED: 0732-0003

"L" Long Lever (3.50") Single Acting with Floating Bracket

FLOATING MOUNT - FIXED DISC

PICTURED: 0732-0002

"M" Machined Cam Lever (1.75") Single Acting

FIXED MOUNT - FLOATING DISC

PICTURED: 0707-0000

"M" Machined Cam Lever (1.75") Single Acting with Floating Bracket

FLOATING MOUNT - FIXED DISC

PICTURED: 0707-0001

"S" Short Lever (1.75") Single Acting

FIXED MOUNT - FLOATING DISC

PICTURED: 0732-0000

"S" Short Lever (1.75") Single Acting with Floating Bracket

FLOATING MOUNT - FIXED DISC

PICTURED: 0732-0001

ME10 SPECIFICATIONS

Maximum lever force "L" Long Lever:	225 Lbs.
Maximum lever force "M" & "S" Levers:	450 Lbs.
Accommodates Tolomatic disc diameters:	6-5/16", 8", 10", 12", 16"
Maximum disc diameter:	none
Housing Material:	Cast aluminum
Bolts:	Zinc plated grade 5
Wearable friction material:	0.46 cu. in.
Friction material:	Replaceable, high-grade
Total lining area:	2.00 sq. in.
Lever / Cam:	Heat treated one-piece lever/cam or machined "V" notch cam
OPTIONS	
Floating bracket:	Stamped steel construction with zinc plated steel bushings
Additional lever positions:	Consult factory

MOUNTING DIMENSIONS

Disc Diameter		6.313"	8"	10"	12"	16"
	C	3.469"	4.312"	5.312"	6.312"	8.312"
Braking Radius	D	2.481"	3.325"	4.325"	5.325"	7.325"

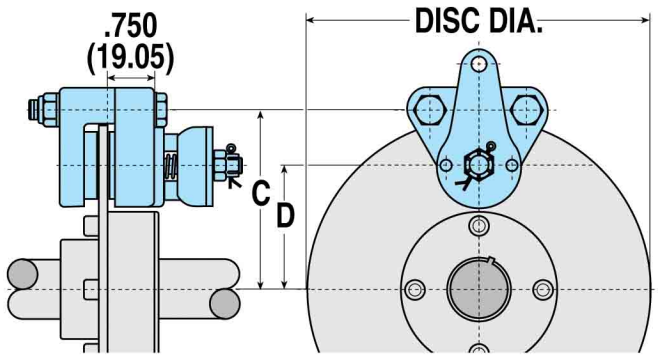

DISC SIZING EQUATIONS

"L" LONG LEVER (3.50"):

DYNAMIC TORQUE (IN.-LBS.) = **5.38 x BRAKING RADIUS** (IN.) **x LEVER FORCE** (LBS.)
STATIC (PARKING) TORQUE (IN.-LBS.) = **2.69 x BRAKING RADIUS** (IN.) **x LEVER FORCE** (LBS.)

"M" MACHINED CAM (1.75") & "S" SHORT LEVER (1.75"):

DYNAMIC TORQUE (IN.-LBS.) = **2.69 x BRAKING RADIUS** (IN.) **x LEVER FORCE** (LBS.)
STATIC (PARKING) TORQUE (IN.-LBS.) = **1.345 x BRAKING RADIUS** (IN.) **x LEVER FORCE** (LBS.)

BRAKING RADIUS (IN.) = **[DISC DIAMETER ÷ 2] - 0.675**

CAM TRAVEL DATA

1. 15° maximum travel when linings are new and with 1/32" gap each side of disc.
2. Periodic tightening of lock nut will reduce travel of lever and will allow 1/4" wear on each lining.
3. 90° maximum travel after 3/16" wear on each lining without intermediate tightening of lock nut.

Caliper Disc Brakes

ME10 SERIES - ALUMINUM

PERFORMANCE DATA

Dynamic Torque vs Lever Force

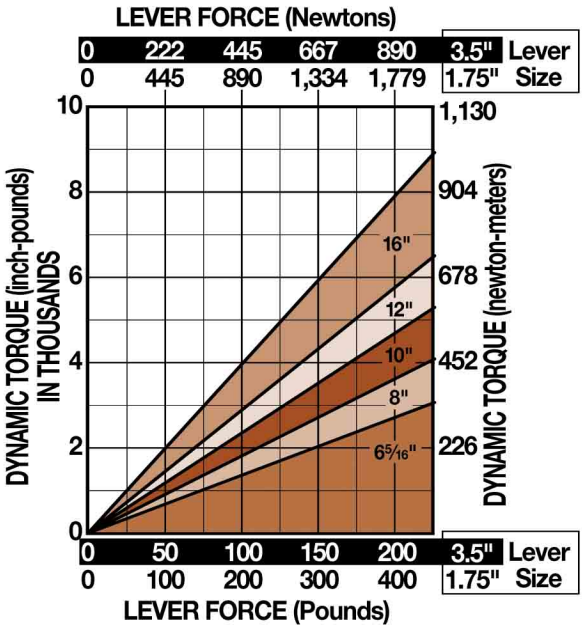

Static Torque vs Lever Force

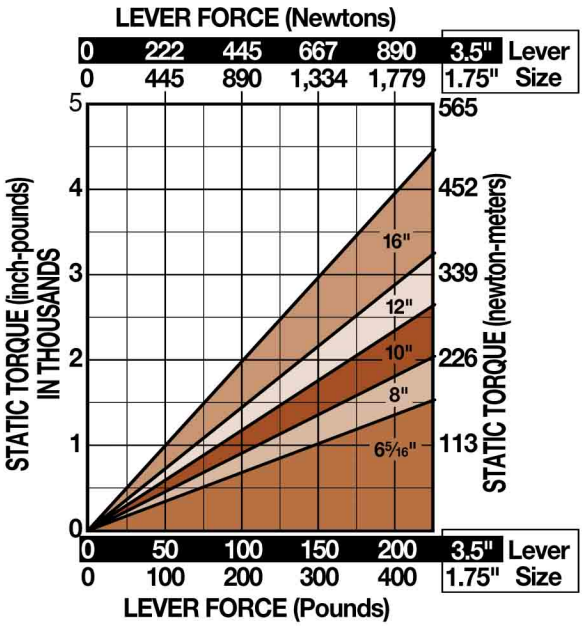

"L" LONG LEVER - SINGLE ACTING

FIXED MOUNT - FLOATING DISC

Accommodates disc thickness: 5/32"

Weight .75 lbs. .34 kgs.

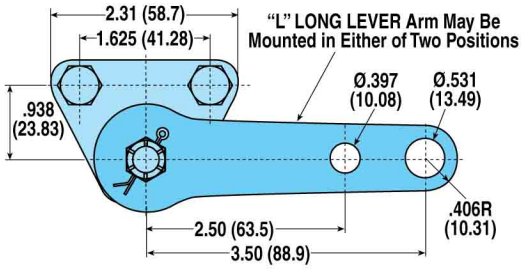

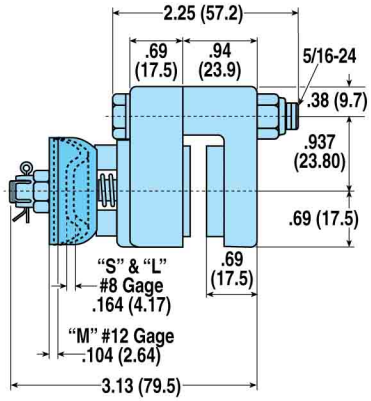

MODEL CODE	DISC THK.	OPTIONS / DESCRIPTION	ASSEMBLY NUMBER
ME10LA	5/32"	Long Cam	0732-0003

"L" LONG LEVER - SINGLE ACTING WITH FLOATING BRACKET

FLOATING MOUNT - FIXED DISC

Accommodates disc thickness: 5/32" 1/4"

Weight 1.25 lbs. .56 kgs.

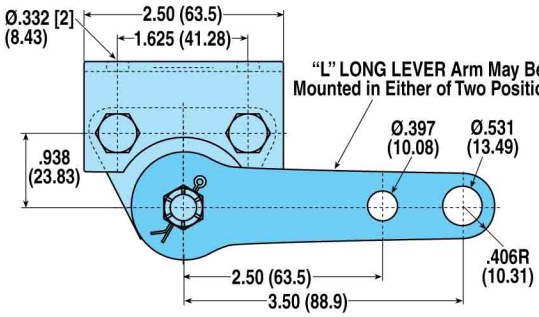

See "S" SHORT LEVER SINGLE ACTING WITH FLOATING BRACKET dimensional drawing for additional measurements

MODEL CODE	DISC THK.	A	B	OPTIONS / DESCRIPTION	ASSEMBLY NUMBER
ME10LAF	5/32"	–	3.13"	Long Cam, Floating Bracket	0732-0002
ME10LBF	1/4"	.093"	3.22"	Long Cam, Floating Bracket	0732-0004

BRAKE MODEL LETTER CODES

A 5/32" Thick Disc	**L** Long Cam (ME Brakes)	**ME** Mechanical Brake
B 1/4" Thick Disc	**M** Machined Cam (ME Brakes)	**S** Short Cam (ME Brakes)
F Floating Bracket Mount		

Caliper Disc Brakes

ME10 SERIES - ALUMINUM

"M" MACHINED CAM - SINGLE ACTING

FIXED MOUNT - FLOATING DISC

Accommodates disc thickness: 5/32"

Weight .75 lbs. .34 kgs.

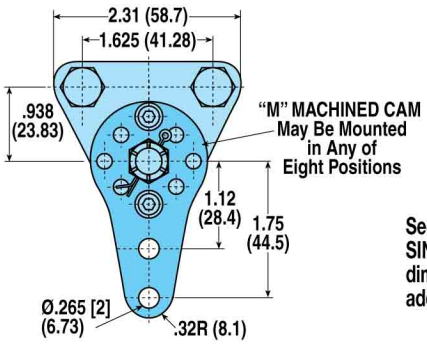

See "S" SHORT LEVER SINGLE ACTING dimensional drawing for additional measurements

MODEL CODE	DISC THK.	OPTIONS / DESCRIPTION	ASSEMBLY NUMBER
ME10MA	5/32"	Machined Cam	0707-0000

"M" MACHINED CAM - SINGLE ACTING WITH FLOATING BRACKET

FLOATING MOUNT - FIXED DISC

Accommodates disc thickness: 5/32"

Weight 1.50 lbs. .68 kgs.

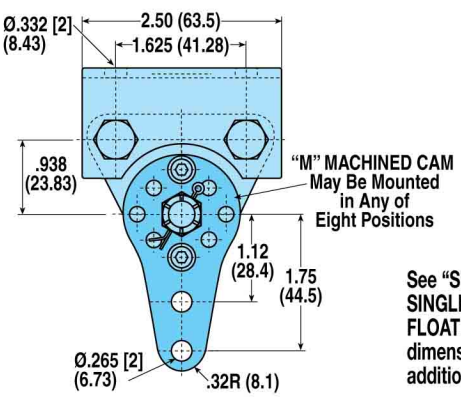

See "S" SHORT LEVER SINGLE ACTING WITH FLOATING BRACKET dimensional drawing for additional measurements

MODEL CODE	DISC THK.	A	B	OPTIONS / DESCRIPTION	ASSEMBLY NUMBER
ME10MAF	5/32"	–	3.13"	Machined Cam, Floating Bracket	0707-0001

"S" SHORT LEVER - SINGLE ACTING

FIXED MOUNT - FLOATING DISC

Accommodates disc thickness: 5/32"

Weight .75 lbs. .34 kgs.

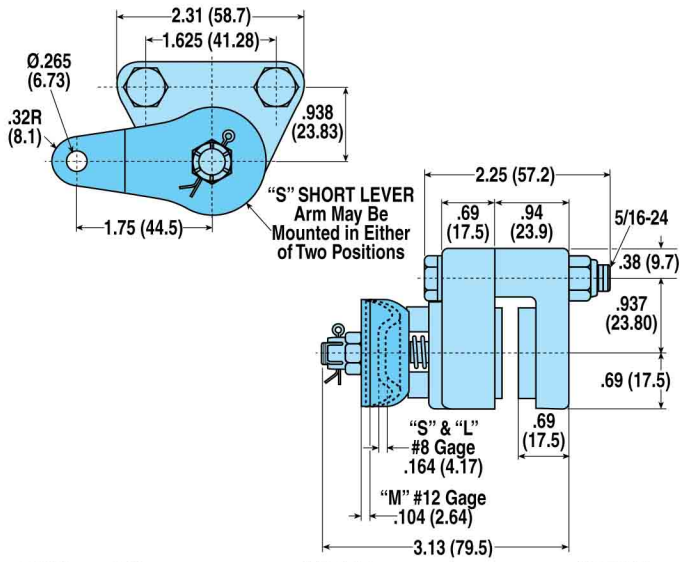

MODEL CODE	DISC THK.	OPTIONS / DESCRIPTION	ASSEMBLY NUMBER
ME10SA	5/32"	Short Cam	0732-0000

"S" SHORT LEVER - SINGLE ACTING WITH FLOATING BRACKET

FLOATING MOUNT - FIXED DISC

Accommodates disc thickness: 5/32" 1/4"

Weight 1.25 lbs. .56 kgs.

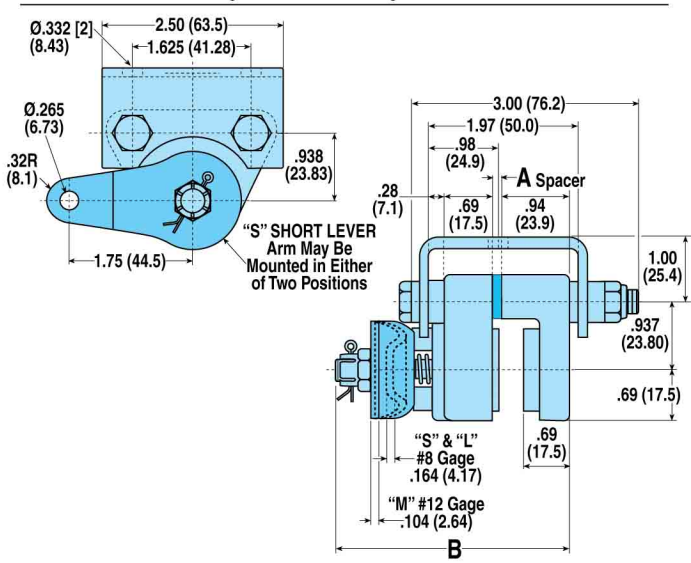

MODEL CODE	DISC THK.	A	B	OPTIONS / DESCRIPTION	ASSEMBLY NUMBER
ME10SAF	5/32"	–	3.13"	Short Cam, Floating Bracket	0732-0001
ME10SBF	1/4"	.093"	3.22"	Short Cam, Floating Bracket	0732-0005

Caliper Disc Brakes

ME20 SERIES - ALUMINUM

AVAILABLE STYLES

"L" Long Lever (3.50") Single Acting

FIXED MOUNT - FLOATING DISC

PICTURED: 0731-0003

"L" Long Lever (3.50") Single Acting with Floating Bracket

FLOATING MOUNT - FIXED DISC

PICTURED: 0731-0002

"M" Machined Cam Lever (1.75") Single Acting

FIXED MOUNT - FLOATING DISC

PICTURED: 0726-0000

"M" Machined Cam Lever (1.75") Single Acting with Floating Bracket

FLOATING MOUNT - FIXED DISC

PICTURED: 0726-0001

"S" Short Lever (1.75") Single Acting

FIXED MOUNT - FLOATING DISC

PICTURED: 0731-0000

"S" Short Lever (1.75") Single Acting with Floating Bracket

FLOATING MOUNT - FIXED DISC

PICTURED: 0731-0001

ME20 SPECIFICATIONS

Maximum lever force "L" Long Lever:	225 Lbs.
Maximum lever force "M" & "S" Levers:	450 Lbs.
Accommodates Tolomatic disc diameters:	6-5/16", 8", 10", 12", 16"
Maximum disc diameter:	none
Housing Material:	Cast aluminum
Bolts:	Zinc plated grade 5
Wearable friction material:	0.83 cu. in.
Friction material:	Replaceable, high-grade
Total lining area:	4.00 sq. in.
Lever / Cam:	Heat treated one-piece lever/cam or machined "V" notch cam
OPTIONS	
Floating bracket:	Stamped steel construction with zinc plated steel bushings
Additional lever positions:	Consult factory

MOUNTING DIMENSIONS

Disc Diameter		6.313"	8"	10"	12"	16"
	C	3.531"	4.375"	5.375"	6.375"	8.375"
Braking Radius	D	2.281"	3.125"	4.125"	5.125"	7.125"

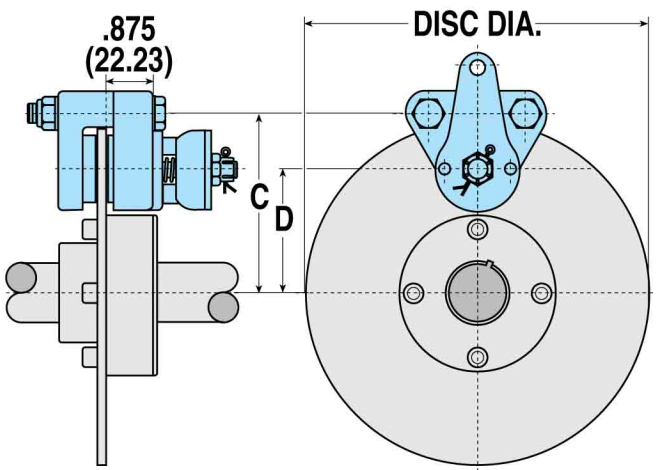

DISC SIZING EQUATIONS

"L" LONG LEVER (3.50"):

DYNAMIC TORQUE (IN.-LBS.) = **5.38 x BRAKING RADIUS** (IN.) **x LEVER FORCE** (LBS.)
STATIC (PARKING) TORQUE (IN.-LBS.) = **2.69 x BRAKING RADIUS** (IN.) **x LEVER FORCE** (LBS.)

"M" MACHINED CAM (1.75") & "S" SHORT LEVER (1.75"):

DYNAMIC TORQUE (IN.-LBS.) = **2.69 x BRAKING RADIUS** (IN.) **x LEVER FORCE** (LBS.)
STATIC (PARKING) TORQUE (IN.-LBS.) = **1.345 x BRAKING RADIUS** (IN.) **x LEVER FORCE** (LBS.)

BRAKING RADIUS (IN.) = **[DISC DIAMETER ÷ 2] - 0.875**

CAM TRAVEL DATA

1. 15° maximum travel when linings are new and with 1/32" gap each side of disc.
2. Periodic tightening of lock nut will reduce travel of lever and will allow 1/4" wear on each lining.
3. 90° maximum travel after 3/16" wear on each lining without intermediate tightening of lock nut.

Caliper Disc Brakes

ME20 SERIES - ALUMINUM

PERFORMANCE DATA

Dynamic Torque vs Lever Force

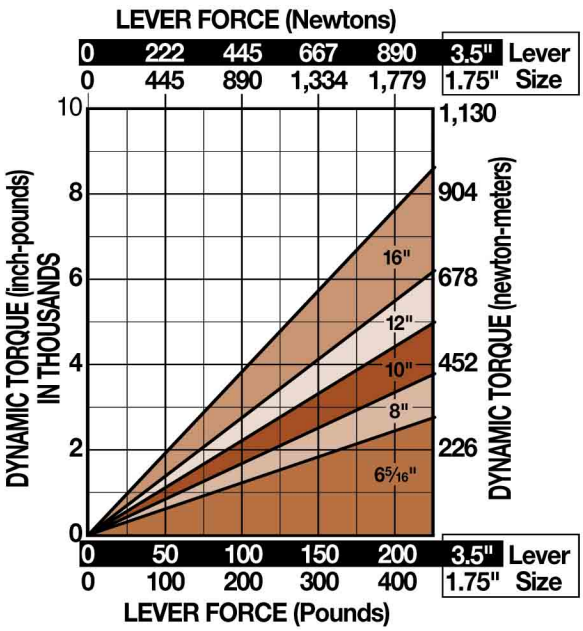

Static Torque vs Lever Force

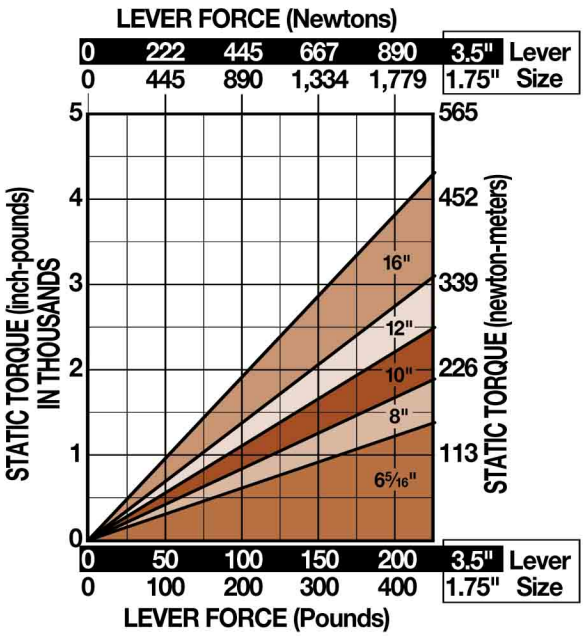

BRAKE MODEL LETTER CODES

A 5/32" Thick Disc	**L** Long Cam (ME Brakes)	**ME** Mechanical Brake
B 1/4" Thick Disc	**M** Machined Cam (ME Brakes)	**S** Short Cam (ME Brakes)
F Floating Bracket Mount		

"L" LONG LEVER - SINGLE ACTING

FIXED MOUNT - FLOATING DISC

Accommodates disc thickness:	5/32"	1/4"
Weight	1.50 lbs.	.68 kgs.

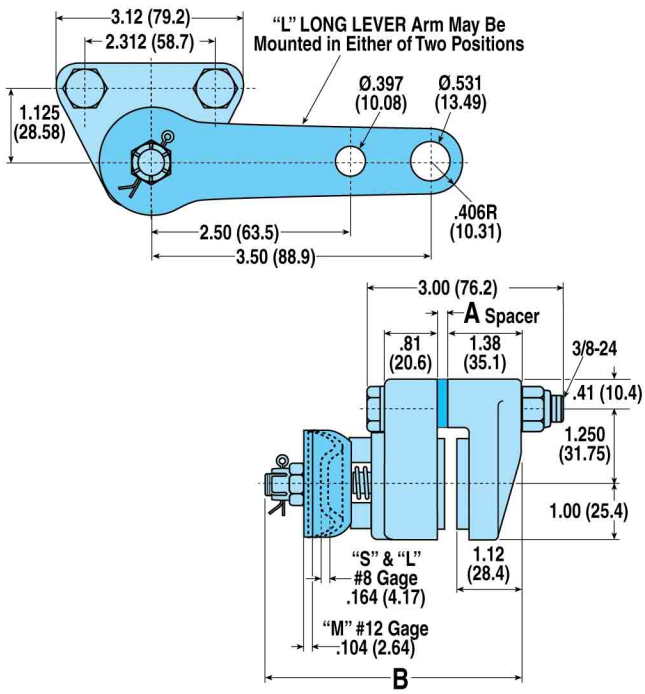

MODEL CODE	DISC THK.	A	B	OPTIONS / DESCRIPTION	ASSEMBLY NUMBER
ME20LA	5/32"	–	3.63"	Long Cam	0731-0003
ME20LB	1/4"	.093"	3.72"	Long Cam	0731-0005

"L" LONG LEVER - SINGLE ACTING WITH FLOATING BRACKET

FLOATING MOUNT - FIXED DISC

Accommodates disc thickness:	5/32"	1/4"
Weight	2.25 lbs.	1.02 kgs.

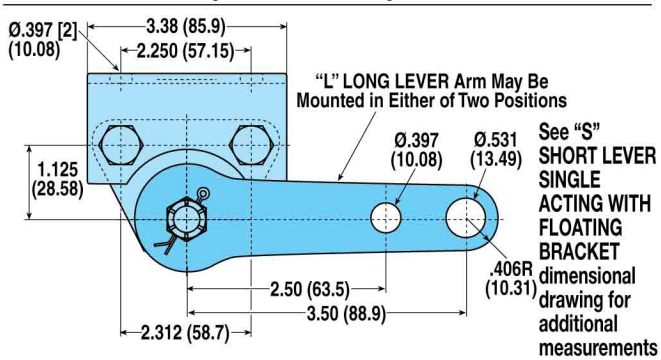

MODEL CODE	DISC THK.	A	B	OPTIONS / DESCRIPTION	ASSEMBLY NUMBER
ME20LAF	5/32"	–	3.63"	Long Cam, Floating Bracket	0731-0002
ME20LBF	1/4"	.093"	3.72"	Long Cam, Floating Bracket	0731-0006

Caliper Disc Brakes

ME20 SERIES - ALUMINUM

"M" MACHINED CAM - SINGLE ACTING

FIXED MOUNT - FLOATING DISC

Accommodates disc thickness: 5/32" 1/4"

Weight 1.50 lbs. .68 kgs.

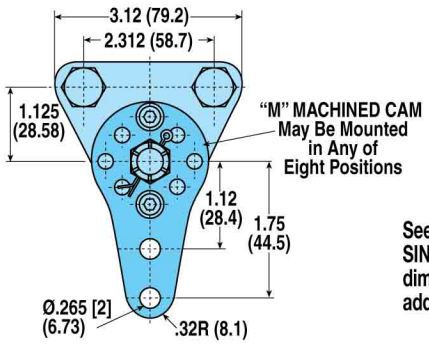

See "S" SHORT LEVER SINGLE ACTING dimensional drawing for additional measurements

MODEL CODE	DISC THK.	A	B	OPTIONS / DESCRIPTION	ASSEMBLY NUMBER
ME20MA	5/32"	–	3.63"	Machined Cam	0726-0000
ME20MB	1/4"	.093"	3.72"	Machined Cam	0726-0002

"M" MACHINED CAM - SINGLE ACTING WITH FLOATING BRACKET

FLOATING MOUNT - FIXED DISC

Accommodates disc thickness: 5/32" 1/4"

Weight 2.25 lbs. 1.02 kgs.

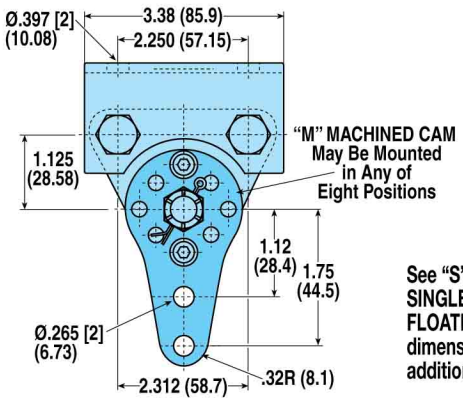

See "S" SHORT LEVER SINGLE ACTING WITH FLOATING BRACKET dimensional drawing for additional measurements

MODEL CODE	DISC THK.	A	B	OPTIONS / DESCRIPTION	ASSEMBLY NUMBER
ME20MAF	5/32"	–	3.63"	Machined Cam, Floating Bracket	0726-0001
ME20MBF	1/4"	.093"	3.72"	Machined Cam, Floating Bracket	0726-0003

"S" SHORT LEVER - SINGLE ACTING

FIXED MOUNT - FLOATING DISC

Accommodates disc thickness: 5/32" 1/4"

Weight 1.50 lbs. .68 kgs.

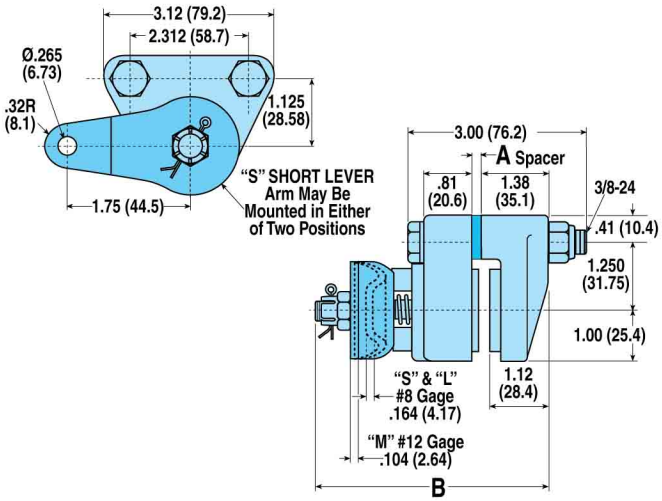

MODEL CODE	DISC THK.	A	B	OPTIONS / DESCRIPTION	ASSEMBLY NUMBER
ME20SA	5/32"	–	3.63"	Short Cam	0731-0000
ME20SB	1/4"	.093"	3.72"	Short Cam	0731-0007

"S" SHORT LEVER - SINGLE ACTING WITH FLOATING BRACKET

FLOATING MOUNT - FIXED DISC

Accommodates disc thickness: 5/32" 1/4"

Weight 2.25 lbs. 1.02 kgs.

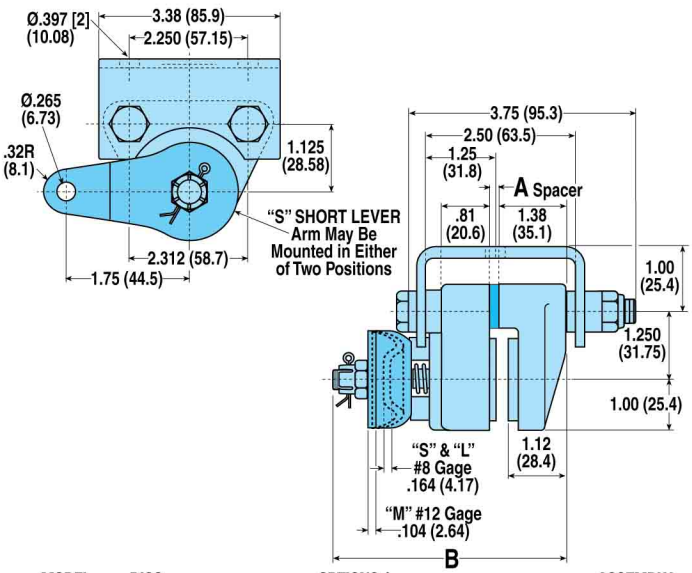

MODEL CODE	DISC THK.	A	B	OPTIONS / DESCRIPTION	ASSEMBLY NUMBER
ME20SAF	5/32"	–	3.63"	Short Cam, Floating Bracket	0731-0001
ME20SBF	1/4"	.093"	3.72"	Short Cam, Floating Bracket	0731-0004

Caliper Disc Brakes

ME220 SERIES - ALUMINUM OR CAST IRON

AVAILABLE STYLES

Aluminum Single Acting

FIXED MOUNT - FLOATING DISC

PICTURED: 0745-0000

Aluminum Single Acting with Floating Bracket

FLOATING MOUNT - FIXED DISC

PICTURED: 0745-0001

Cast Iron Single Acting

FIXED MOUNT - FLOATING DISC

PICTURED: 0745-0002

Cast Iron Single Acting with Floating Bracket

FLOATING MOUNT - FIXED DISC

PICTURED: 0745-0003

ME220 SPECIFICATIONS

Maximum lever force Aluminum Housing:	580 Lbs.
Maximum lever force Cast Iron Housing:	660 Lbs.
Accommodates Tolomatic disc diameters:	6-5/16", 8", 10", 12", 16"
Maximum disc diameter:	16"
Housing Material:	Cast aluminum or Cast ductile iron
Bolts:	Zinc plated grade 8
Wearable friction material:	1.66 cu. in.
Friction material:	Replaceable, high-grade
Total lining area:	8.00 sq. in.
"M" Machined Cam:	Heat treated one-piece lever/cam or machine "V" notch cam
Lining Wear Adjustment:	One step procedure
OPTIONS	
Floating bracket:	Available

CAM TRAVEL DATA

1. Gap between lining faces and disc when new = .048" total.
2. Angular movement required to actuate brake when new = 7° 30".
3. Maximum axial movement without intermediate adjustment = .387".
4. Wear allowed before adjustment .104" each side.

DISC SIZING EQUATIONS

DYNAMIC TORQUE (IN.-LBS.) = **7.45 x BRAKING RADIUS** (IN.) **x LEVER FORCE** (LBS.)
STATIC (PARKING) TORQUE (IN.-LBS.) = **3.725 x BRAKING RADIUS** (IN.) **x LEVER FORCE** (LBS.)

PERFORMANCE DATA

Dynamic Torque vs Lever Force

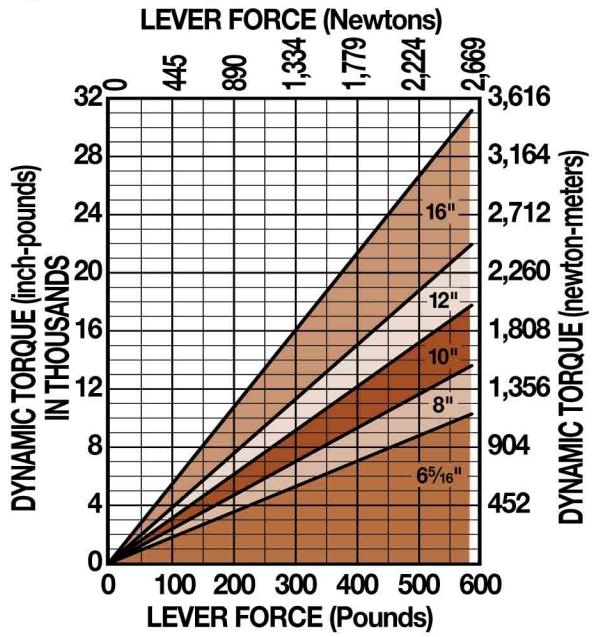

Static Torque vs Lever Force

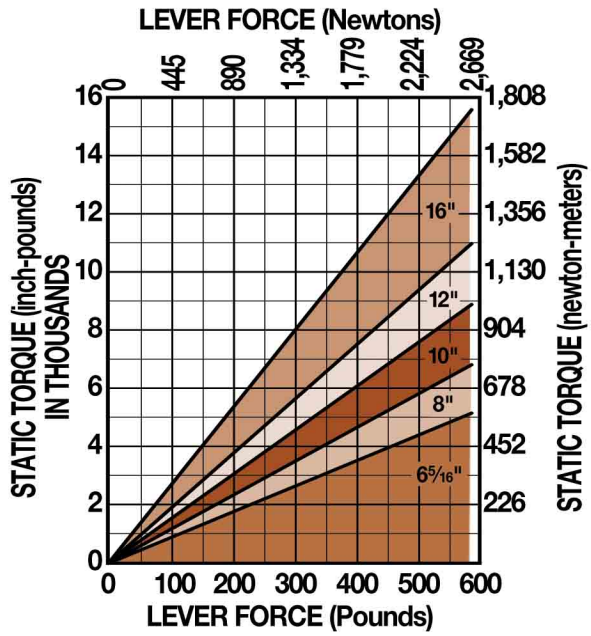

BRAKE MODEL LETTER CODES

A 5/32" Thick Disc	**L** 3/8" Thick Disc
B 1/4" Thick Disc	**M** Machined Cam (ME Brakes)
E 1/2" Thick Disc	**ME** Mechanical Brake
F Floating Bracket Mount	**Q** 1-1/2" Thick Disc
I Iron	**S** Short Cam (ME Brakes)

Caliper Disc Brakes

ME220 SERIES - ALUMINUM OR CAST IRON

SINGLE ACTING

FIXED MOUNT - FLOATING DISC

Accommodates disc thickness:	5/32"	1/4"	3/8"	1/2"
Aluminum Weight	6.0 lbs.	2.72 kgs.		
Cast Iron Weight	10.9 lbs.	4.94 kgs.		

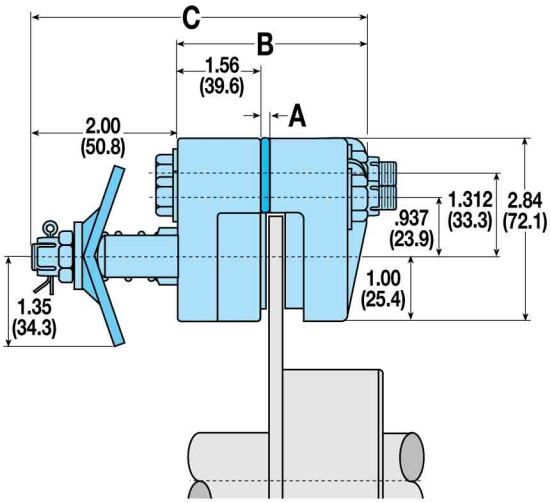

MODEL CODE	DISC THK.	A	B	C	OPTIONS / DESCRIPTION	ASSEMBLY NUMBER
ME220A	5/32"	–	2.72"	5.41"	Mechanical Brake	0745-0000
ME220MAI	5/32"	.500"	3.22"	5.91"	Machined Cam, Cast Iron	0745-0002
ME220B	1/4"	.094"	2.81"	5.50"	Mechanical Brake	0745-0010
ME220MBI	1/4"	.594"	3.31"	6.00"	Machined Cam, Cast Iron	0745-0012
ME220L	3/8"	.219"	2.94"	5.63"	Mechanical Brake	0745-0015
ME220E	1/2"	.344"	3.06"	5.75"	Mechanical Brake	0745-0020

MOUNTING DIMENSIONS

Disc Diameter		6.313"	8"	10"	12"	16"
	D	2.13"	3.00"	4.00"	5.00"	7.09"
Braking Radius		2.38"	3.15"	4.11"	5.08"	7.21"

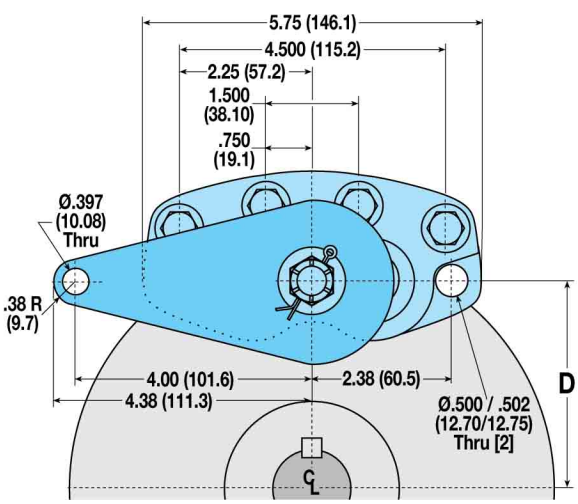

SINGLE ACTING WITH FLOATING BRACKET

FLOATING MOUNT - FIXED DISC

Accommodates disc thickness:	5/32"	1/4"	3/8"	1/2"	1-1/2"
Aluminum Weight	7.5 lbs.	3.40 kgs.			
Cast Iron Weight	12.4 lbs.	5.62 kgs.			

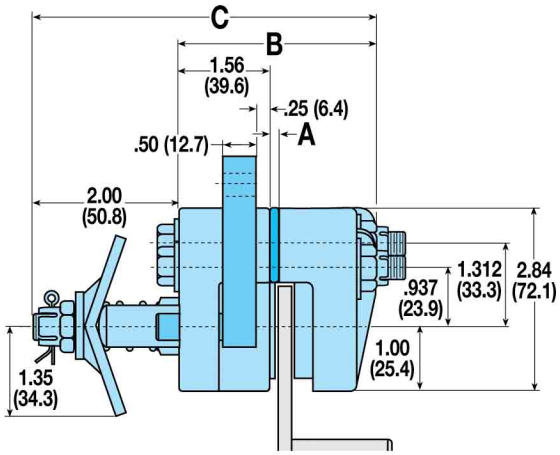

MODEL CODE	DISC THK.	A	B	C	OPTIONS / DESCRIPTION	ASSEMBLY NUMBER
ME220AF	5/32"	–	2.72"	5.41"	Floating Bracket	0745-0001
ME220MAFI	5/32"	.500"	3.22"	5.91"	Fltg Brkt, Mach Cam, Cast Iron	0745-0003
ME220BF	1/4"	.094"	2.81"	5.50"	Floating Bracket	0745-0011
ME220MBFI	1/4"	.594"	3.31"	6.00"	Fltg Brkt, Mach Cam, Cast Iron	0745-0013
ME220LF	3/8"	.219"	2.94"	5.63"	Floating Bracket	0745-0008
ME220MLFI	3/8"	.719"	2.94"	6.13"	Fltg Brkt, Mach Cam, Cast Iron	0745-0017
ME220EF	1/2"	.344"	3.06"	5.75"	Floating Bracket	0745-0021
ME220MEFI	1/2"	.844"	3.06"	6.75"	Fltg Brkt, Mach Cam, Cast Iron	0745-0024
ME220MQFI	1-1/2"	1.844"	4.06"	7.25"	Fltg Brkt, Mach Cam, Cast Iron	0745-0026

MOUNTING DIMENSIONS

Disc Diameter		6.313"	8"	10"	12"	16"
	D	2.13"	3.00"	4.00"	5.00"	7.09"
Braking Radius		2.38"	3.15"	4.11"	5.08"	7.21"

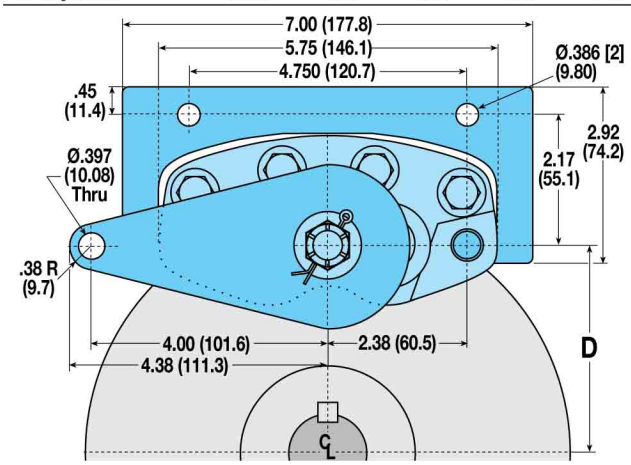

Caliper Disc Brakes

MB3 SERIES - CAST IRON

AVAILABLE STYLES

Single Acting

FIXED MOUNT - FLOATING DISC

PICTURED: 0790-0000

MB3 SPECIFICATIONS

Maximum lever force:	660 Lbs.
Accommodates Tolomatic disc diameters:	10", 12", 16"
Maximum disc diameter:	30"
Housing Material:	Cast iron
Bolts:	Zinc plated grade 5
Wearable friction material:	6.06 cu. in.
Friction material:	Replaceable, high-grade
Total lining area:	9.69 sq. in.
Machined Cam:	Positioning in 60° increments
Lining Wear Adjustment:	One step procedure
Designed to be more efficient and priced lower than competitive brakes	

CAM TRAVEL DATA

1. 0° travel with .500" disc.
2. 90° maximum travel after .125" wear on each side of lining without intermediate tightening of the lock nut.

PERFORMANCE DATA

Dynamic Torque vs Lever Force

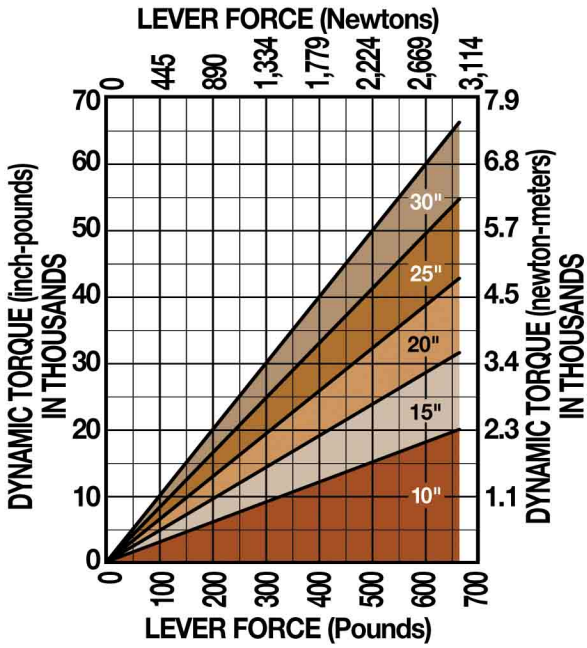

Static Torque vs Lever Force

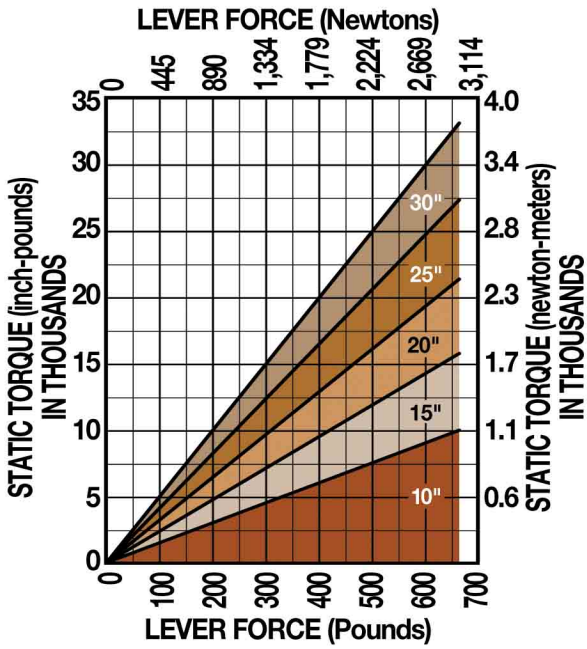

DISC SIZING EQUATIONS

DYNAMIC TORQUE (IN.-LBS.) = **6.99 x BRAKING RADIUS** (IN.) **x LEVER FORCE** (LBS.)
STATIC (PARKING) TORQUE (IN.-LBS.) = **3.49 x BRAKING RADIUS** (IN.) **x LEVER FORCE** (LBS.)
BRAKING RADIUS (IN.) = **[DISC DIAMETER ÷ 2] - 0.688**

Caliper Disc Brakes

MB3 SERIES - CAST IRON

SINGLE ACTING

FIXED MOUNT - FLOATING DISC

Accommodates disc thickness:	1/2"
Weight	13.2 lbs. 5.99 kgs.

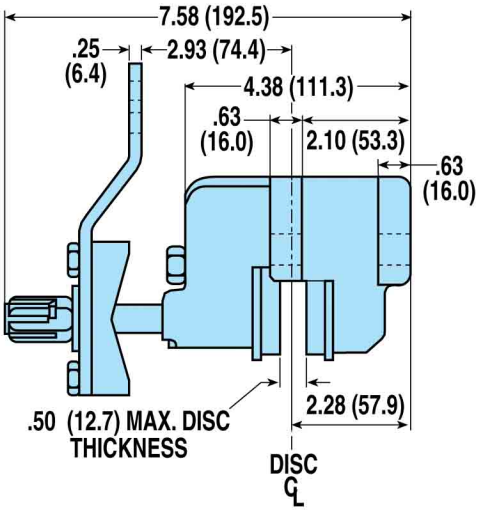

MODEL CODE	DISC THK.	OPTIONS / DESCRIPTION	ASSEMBLY NUMBER
MB3	1/2"	Mechanical Brake	0790-0000

MOUNTING DIMENSIONS

Disc Diameter		10"	15"	20"	25"	30"
	A	5.50"	8.00"	10.50"	13.00"	15.50"
Braking Radius		4.09"	6.59"	9.09"	11.59"	14.09"

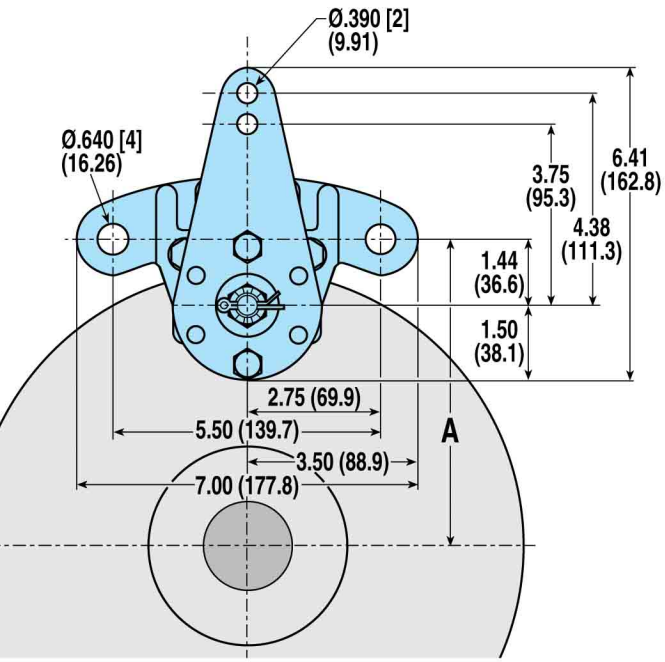

Caliper Disc Brakes

FS20 SERIES - ALUMINUM

AVAILABLE STYLES

Single Acting - Hydraulically Released

FLOATING MOUNT - FIXED DISC

PICTURED: 0760-0000

Single Acting - Pneumatically Released

FLOATING MOUNT - FIXED DISC

PICTURED: 0760-0016

FS20 SPECIFICATIONS

Maximum hydraulic pressure:	1,500 PSI non shock
Maximum pneumatic pressure:	100 PSI non shock
Minimum hydraulic pressure to release brake:	750 PSI
Minimum pneumatic pressure to release brake:	80 PSI (FS20P only)
Accommodates Tolomatic disc diameters:	6-5/16", 8", 10", 12", 16"
Maximum disc diameter:	none
Housing Material:	Die cast aluminum
Bolts:	Zinc plated grade 8
Seals:	Buna-N Standard
Wearable friction material:	.83 cu. in.
Friction material:	Replaceable, high-grade
Total lining area:	4.0 sq. in.
Floating bracket:	Standard
Fluid displacement, hydraulic:	0.056 cu. in.
Fluid displacement, pneumatic:	0.359 cu. in.
OPTIONS	
Seals:	EPR seals

BRAKE MODEL LETTER CODES

A 5/32" Thick Disc	**FS** Spring Applied	**P** Pneumatically Actuated
B 1/4" Thick Disc	**G** EPR Seals	

PERFORMANCE DATA

**Hydraulic Static Torque vs Lining Wear*

*For pneumatically released units (FS20P) see Disc Sizing Equations below

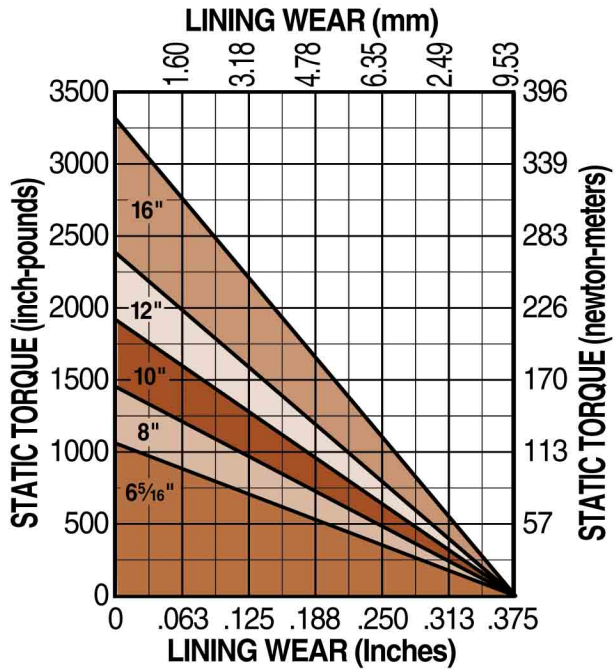

Tangential Force

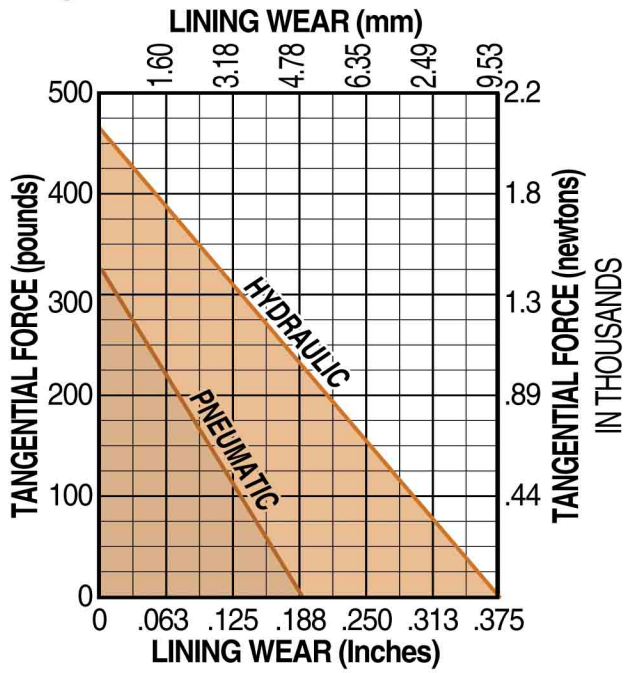

DISC SIZING EQUATIONS

STATIC (PARKING) TORQUE (IN.-LBS.) = **TANGENTIAL FORCE** (LBS.) x **BRAKING RADIUS** (IN.)

BRAKING RADIUS (IN.) = **[DISC DIAMETER ÷ 2] - 0.875**

Caliper Disc Brakes

FS20 SERIES - ALUMINUM

SINGLE ACTING WITH FLOATING BRACKET - HYDRAULICALLY RELEASED

FLOATING MOUNT - FIXED DISC

Accommodates disc thickness: 5/32" 1/4"

Weight 4.0 lbs. 1.81 kgs.

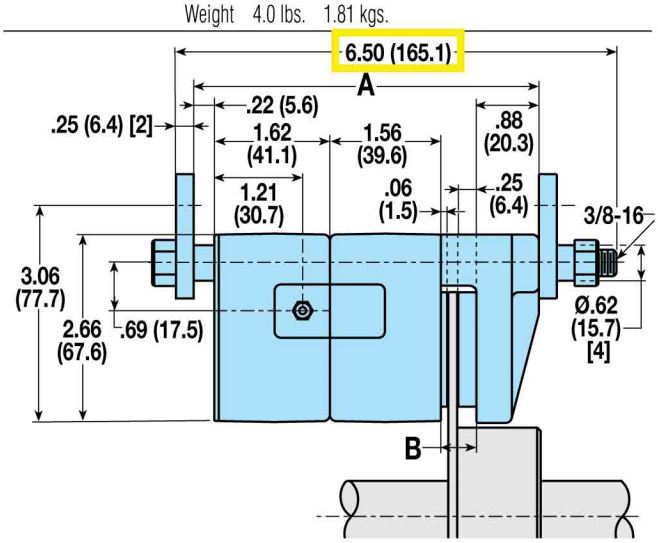

MODEL CODE	DISC THK.	A	B	OPTIONS / DESCRIPTION	ASSEMBLY NUMBER
FS20A	5/32"	4.78"	.500"	Spring Applied	0760-0000
FS20AG	5/32"	4.78"	.500"	Spring Applied, EPR Seals	0760-0003
FS20B	1/4"	4.87"	.593"	Spring Applied	0760-0001
FS20BG	1/4"	4.87"	.593"	Spring Applied, EPR Seals	0760-0004

SINGLE ACTING WITH FLOATING BRACKET - PNEUMATICALLY RELEASED

FLOATING MOUNT - FIXED DISC

Accommodates disc thickness: 5/32" 1/4"

Weight 7.75 lbs. 3.52 kgs.

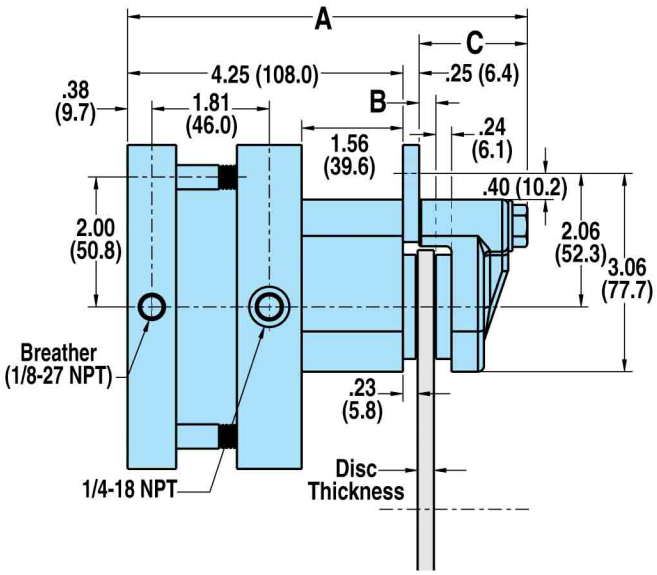

MODEL CODE	DISC THK.	A	B	C	OPTIONS / DESCRIPTION	ASSEMBLY NUMBER
FS20PA	5/32"	6.08"	.17"	1.58"	Spring Applied	0760-0023
FS20PB	1/4"	6.17"	.26"	1.67"	Spring Applied	0760-0016

MOUNTING DIMENSIONS

Disc Diameter		6.313"	8"	10"	12"	16"
Braking Radius	C	2.281"	3.125"	4.125"	5.125"	7.125"
	D	4.344"	5.188"	6.188"	7.188"	9.188"

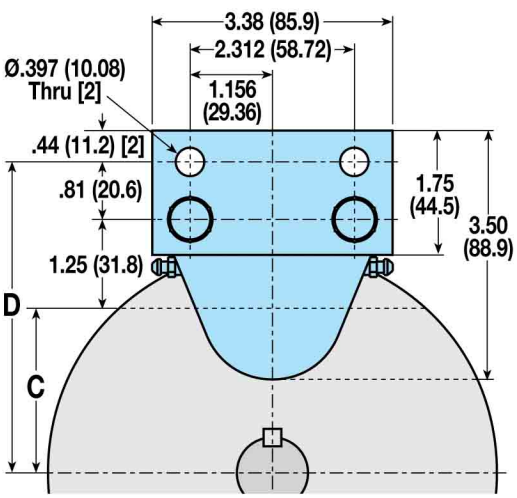

MOUNTING DIMENSIONS

Disc Diameter		6.313"	8"	10"	12"	16"
Braking Radius	D	2.281"	3.125"	4.125"	5.125"	7.125"
	E	4.344"	5.188"	6.188"	7.188"	9.188"

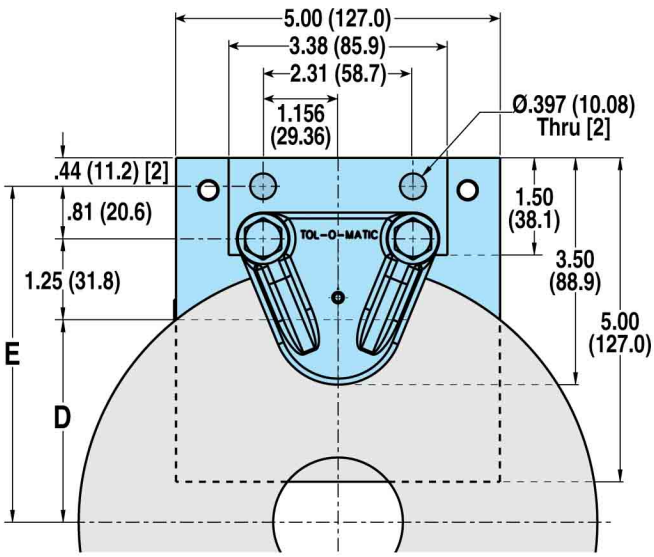

Caliper Disc Brakes

FS220B SERIES - ALUMINUM

AVAILABLE STYLES

Single Acting - B - 750 PSI Release

FLOATING MOUNT - FIXED DISC

PICTURED: 0740-0000

FS220B SPECIFICATIONS

Maximum hydraulic pressure:	2,000 PSI non shock
Minimum hydraulic pressure to release brake:	750 PSI
Accommodates Tolomatic disc diameters:	6-5/16", 8", 10", 12", 16"
Maximum disc diameter:	16"
Housing Material:	Die cast aluminum
Bolts:	Zinc plated grade 8
Seals:	Buna-N Standard
Wearable friction material:	1.66 cu. in.
Friction material:	Replaceable, high-grade
Total lining area:	8.0 sq. in.
Floating bracket:	Standard
Fluid displacement:	0.113 cu. in.

BRAKE MODEL LETTER CODES

A 5/32" Thick Disc	**E** 1/2" Thick Disc	**L** 3/8" Thick Disc
B 1/4" Thick Disc	**FS** Spring Applied	

PERFORMANCE DATA

Static Torque vs Lining Wear

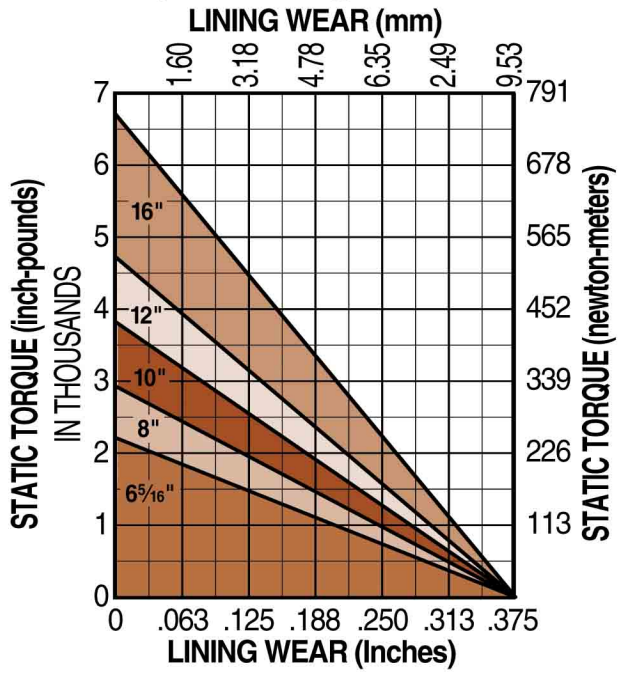

Tangential Force

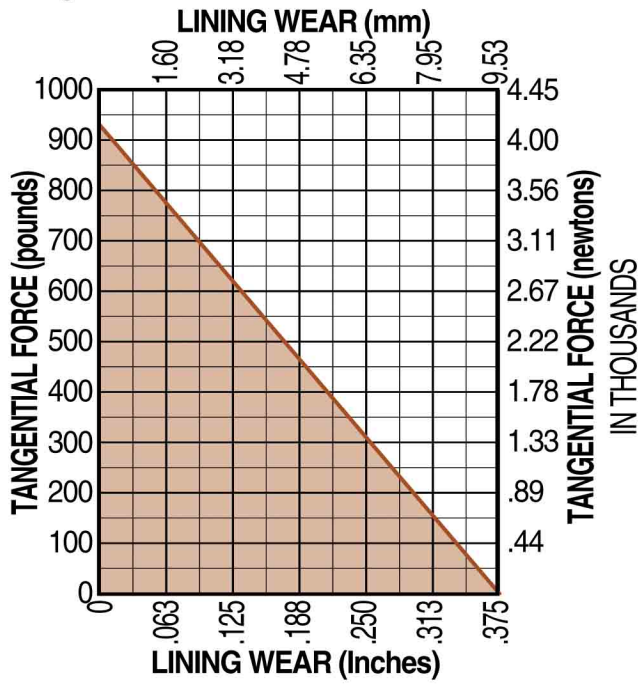

DISC SIZING EQUATIONS

STATIC (PARKING) TORQUE (IN.-LBS.) = **TANGENTIAL FORCE** (LBS.) x **BRAKING RADIUS** (IN.)

Caliper Disc Brakes

FS220B SERIES - ALUMINUM

SINGLE ACTING WITH FLOATING BRACKET

FLOATING MOUNT - FIXED DISC

Accommodates disc thickness:	5/32"	1/4"	3/8"	1/2"
Weight	8.0 lbs.	3.63 kgs.		

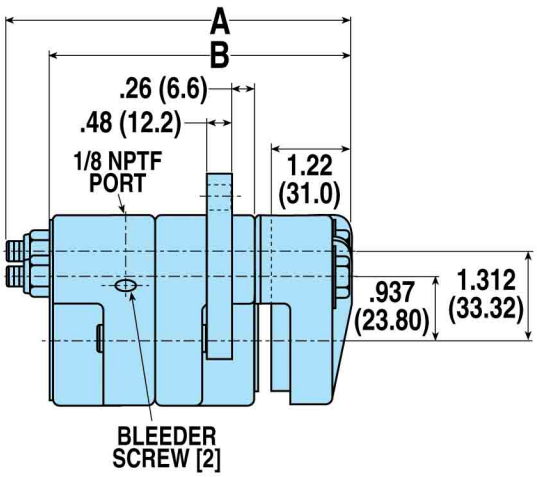

MODEL CODE	DISC THK.	A	B	OPTIONS / DESCRIPTION	ASSEMBLY NUMBER
FS220BA	5/32"	5.31"	4.56"	Floating Bracket, "B" Strength	0740-0000
FS220BB	1/4"	5.31"	4.65"	Floating Bracket, "B" Strength	0740-0017
FS220BL	3/8"	5.81"	4.78"	Floating Bracket, "B" Strength	0740-0019
FS220BE	1/2"	5.81"	4.90"	Floating Bracket, "B" Strength	0740-0021

MOUNTING DIMENSIONS

Disc Diameter		6.313"	8"	10"	12"	16"
Braking Radius		2.38"	3.15"	4.11"	5.08"	7.21"
	C	4.30"	5.17"	6.17"	7.17"	9.17"
	D	3.45"	4.32"	5.32"	6.32"	8.41"
	E	3.07"	3.94"	4.94"	5.94"	8.03"
	F	2.13"	3.00"	4.00"	5.00"	7.09"

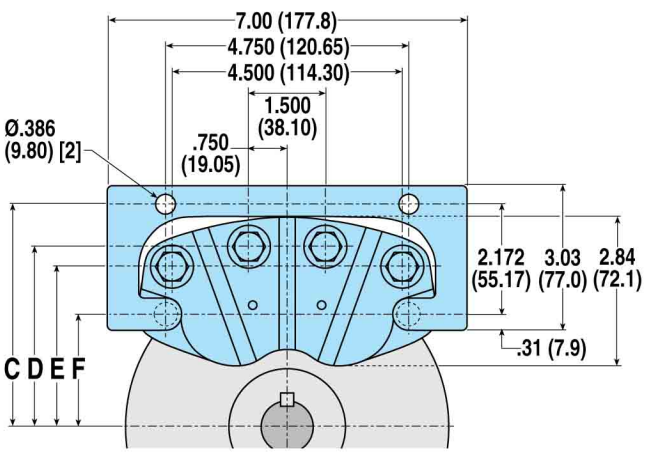

Caliper Disc Brakes

FS220C SERIES - ALUMINUM

AVAILABLE STYLES

Single Acting - C - 1500 PSI Release

FLOATING MOUNT - FIXED DISC

PICTURED: 0741-0000

FS220C SPECIFICATIONS

Maximum hydraulic pressure:	2,000 PSI non shock
Minimum hydraulic pressure to release brake:	1500 PSI
Accommodates Tolomatic disc diameters:	6-5/16", 8", 10", 12", 16"
Maximum disc diameter:	16"
Housing Material:	Die cast aluminum
Bolts:	Zinc plated grade 8
Seals:	Buna-N Standard
Wearable friction material:	1.66 cu. in.
Friction material:	Replaceable, high-grade
Total lining area:	8.0 sq. in.
Floating bracket:	Standard
Fluid displacement:	0.113 cu. in.

BRAKE MODEL LETTER CODES

A 5/32" Thick Disc	**E** 1/2" Thick Disc	**L** 3/8" Thick Disc
B 1/4" Thick Disc	**FS** Spring Applied	

PERFORMANCE DATA

Static Torque vs Lining Wear

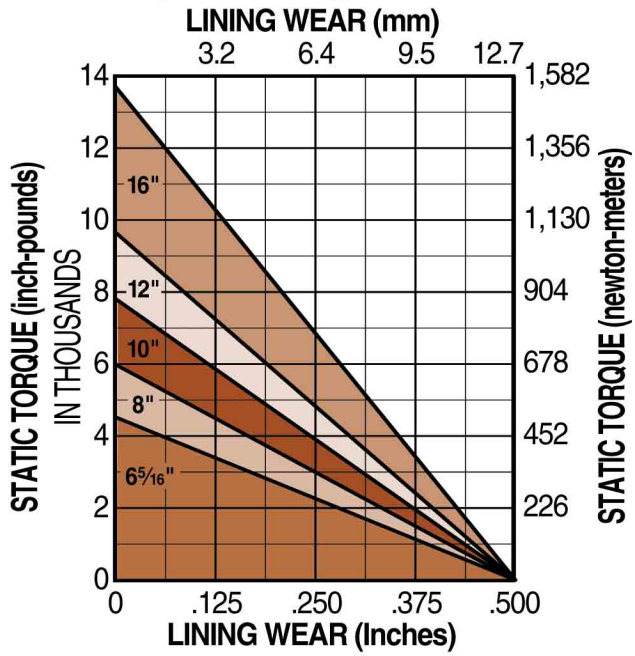

Tangential Force

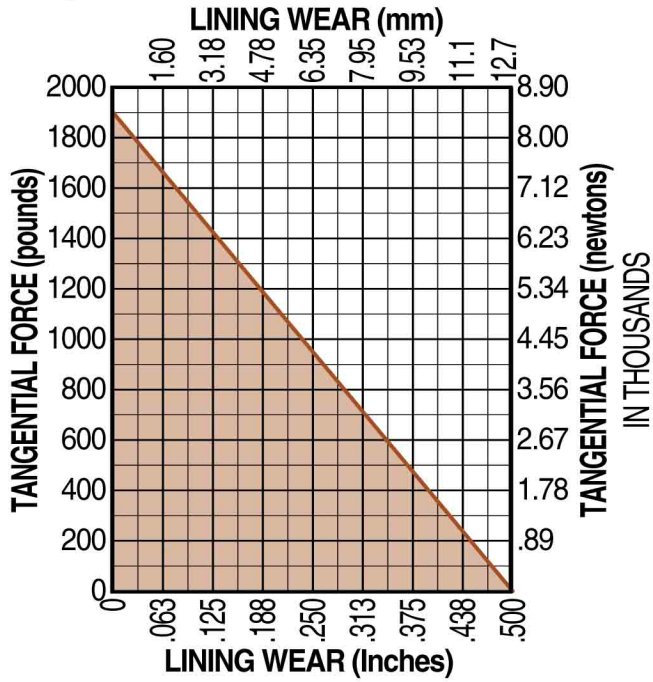

DISC SIZING EQUATIONS

STATIC (PARKING) TORQUE (IN.-LBS.) = **TANGENTIAL FORCE** (LBS.) x **BRAKING RADIUS** (IN.)

Caliper Disc Brakes

FS220C SERIES - ALUMINUM

SINGLE ACTING WITH FLOATING BRACKET

FLOATING MOUNT - FIXED DISC

Accommodates disc thickness:	5/32"	1/4"	3/8"	1/2"
Weight	8.0 lbs.	3.63 kgs.		

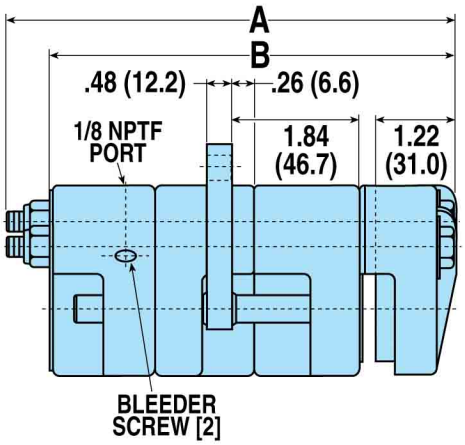

MODEL CODE	DISC THK.	A	B	OPTIONS / DESCRIPTION	ASSEMBLY NUMBER
FS220CA	5/32"	6.81"	6.16"	Floating Bracket, "C" Strength	0741-0000
FS220CB	1/4"	6.81"	6.25"	Floating Bracket, "C" Strength	0741-0018
FS220CL	3/8"	7.31"	6.38"	Floating Bracket, "C" Strength	0741-0020
FS220CE	1/2"	7.31"	6.50"	Floating Bracket, "C" Strength	0741-0022

MOUNTING DIMENSIONS

Disc Diameter		6.313"	8"	10"	12"	16"
Braking Radius		2.38"	3.15"	4.11"	5.08"	7.21"
	C	4.30"	5.17"	6.17"	7.17"	9.17"
	D	3.45"	4.32"	5.32"	6.32"	8.41"
	E	3.07"	3.94"	4.94"	5.94"	8.03"
	F	2.13"	3.00"	4.00"	5.00"	7.09"

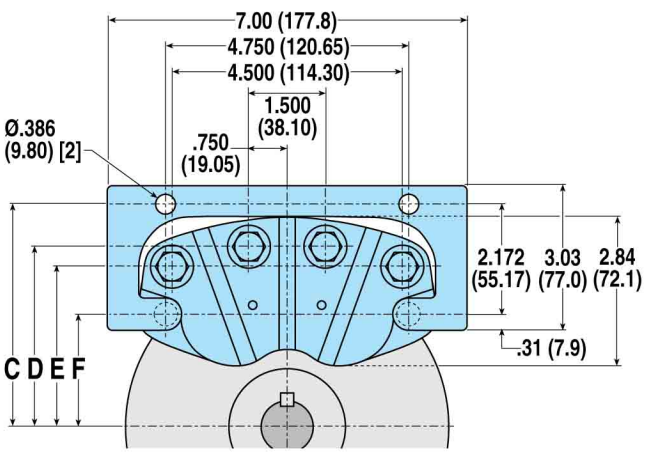

Caliper Disc Brakes

FS220BI SERIES - DUCTILE IRON

AVAILABLE STYLES

Single Acting - B - 750 PSI Release

FLOATING MOUNT - FIXED DISC

PICTURED: 0740-0001

FS220BI SPECIFICATIONS

Maximum hydraulic pressure:	2,000 PSI non shock
Minimum hydraulic pressure to release brake:	750 PSI
Accommodates Tolomatic disc diameters:	6-5/16", 8", 10", 12", 16"
Maximum disc diameter:	16"
Housing Material:	Cast ductile iron
Bolts:	Zinc plated grade 8
Seals:	Buna-N Standard
Wearable friction material:	2.35 cu. in.
Friction material:	Replaceable, high-grade
Total lining area:	9.4 sq. in.
Floating bracket:	Standard
Fluid displacement:	0.113 cu. in.
Recommended wear compensation interval:	.06 in. lining wear

BRAKE MODEL LETTER CODES

A 5/32" Thick Disc	**FS** Spring Applied	**K** Manual Compensator
B 1/4" Thick Disc	**I** Iron	**L** 3/8" Thick Disc
E 1/2" Thick Disc	**J** Manual Retractor	

PERFORMANCE DATA

Static Torque vs Lining Wear

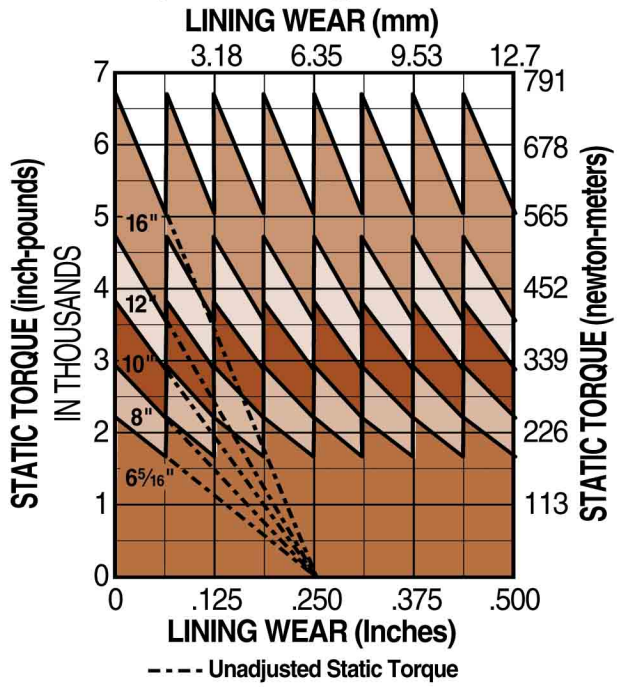

Tangential Force

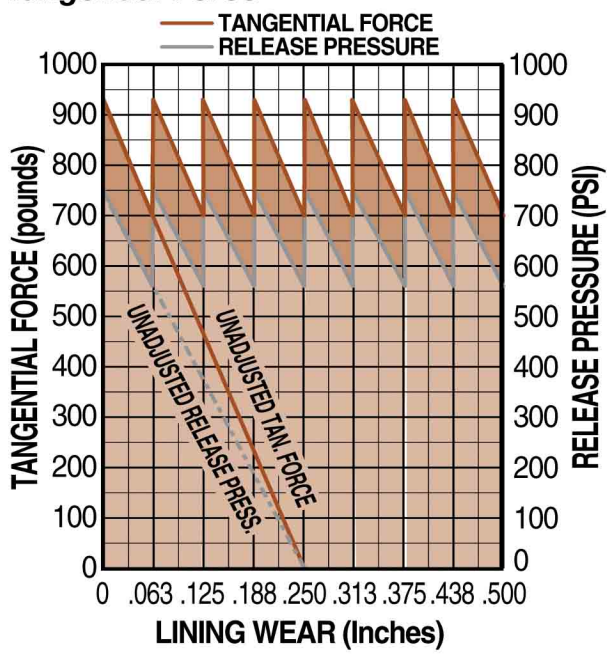

DISC SIZING EQUATIONS

STATIC (PARKING) TORQUE (IN.-LBS.) = **TANGENTIAL FORCE** (LBS.) x **BRAKING RADIUS** (IN.)

Caliper Disc Brakes

FS220BI SERIES - DUCTILE IRON

SINGLE ACTING WITH FLOATING BRACKET

FLOATING MOUNT - FIXED DISC

Accommodates disc thickness:	5/32"	1/4"	3/8"	1/2"
Weight	14.5 lbs.	6.58 kgs.		

STANDARD MODELS

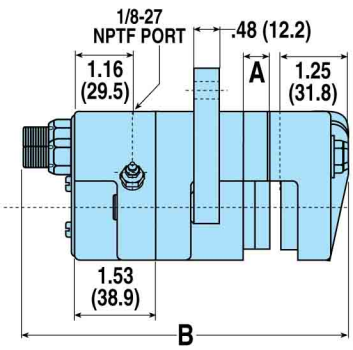

JK OPTION MODELS

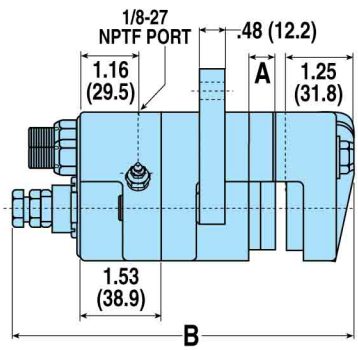

MODEL CODE	DISC THK.	A	B	OPTIONS / DESCRIPTION	ASSEMBLY NUMBER
FS220BIA	5/32"	—	5.27"	Floating Bracket, "B" Strength	0740-0001
FS220BIB	1/4"	.093"	5.77"	Floating Bracket, "B" Strength	0740-0003
FS220BIL	3/8"	.218"	5.77"	Floating Bracket, "B" Strength	0740-0004
FS220BIE	1/2"	.344"	5.77"	Floating Bracket, "B" Strength	0740-0005
FS220BIAJK	5/32"	.500"	6.32"	Ftg Bkt,"B"Stgh,ManRet,ManComp	0740-0006
FS220BIBJK	1/4"	.594"	6.42"	Ftg Bkt,"B"Stgh,ManRet,ManComp	0740-0007
FS220BILJK	3/8"	.718"	6.54"	Ftg Bkt,"B"Stgh,ManRet,ManComp	0740-0008
FS220BIEJK	1/2"	.844"	6.67"	Ftg Bkt,"B"Stgh,ManRet,ManComp	0740-0009

MOUNTING DIMENSIONS

Disc Diameter		6.313"	8"	10"	12"	16"
Braking Radius		2.38"	3.15"	4.11"	5.08"	7.21"
	C	4.30"	5.17"	6.17"	7.17"	9.17"
	D	3.45"	4.32"	5.32"	6.32"	8.41"
	E	3.07"	3.94"	4.94"	5.94"	8.03"
	F	2.13"	3.00"	4.00"	5.00"	7.09"

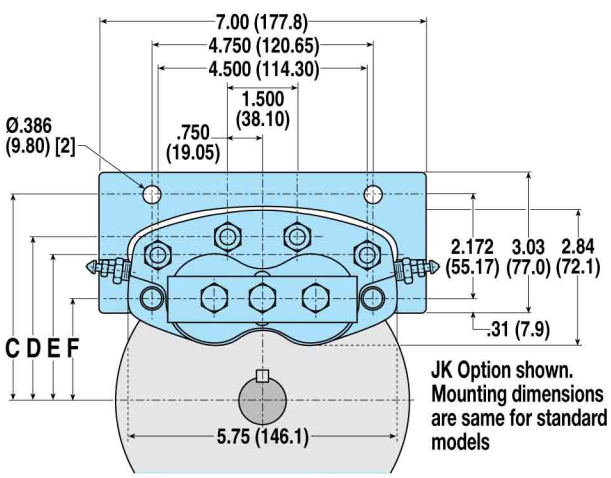

JK Option shown. Mounting dimensions are same for standard models

Caliper Disc Brakes

FS220CI SERIES - DUCTILE IRON

AVAILABLE STYLES

Single Acting - C - 1500 PSI Release

FLOATING MOUNT - FIXED DISC

PICTURED: 0741-0009 (Shown with JK Option)

FS220CI SPECIFICATIONS

Maximum hydraulic pressure:	2,000 PSI non shock
Minimum hydraulic pressure to release brake:	1500 PSI
Accommodates Tolomatic disc diameters:	6-5/16", 8", 10", 12", 16"
Maximum disc diameter:	16"
Housing Material:	Cast ductile iron
Bolts:	Zinc plated grade 8
Seals:	Buna-N Standard
Wearable friction material:	2.35 cu. in.
Friction material:	Replaceable, high-grade
Total lining area:	9.4 sq. in.
Floating bracket:	Standard
Fluid displacement:	0.113 cu. in.
Recommended wear compensation interval:	.10 in. lining wear

BRAKE MODEL LETTER CODES

A 5/32" Thick Disc	**FS** Spring Applied	**K** Manual Compensator
B 1/4" Thick Disc	**I** Iron	**L** 3/8" Thick Disc
E 1/2" Thick Disc	**J** Manual Retractor	

PERFORMANCE DATA

Static Torque vs Lining Wear

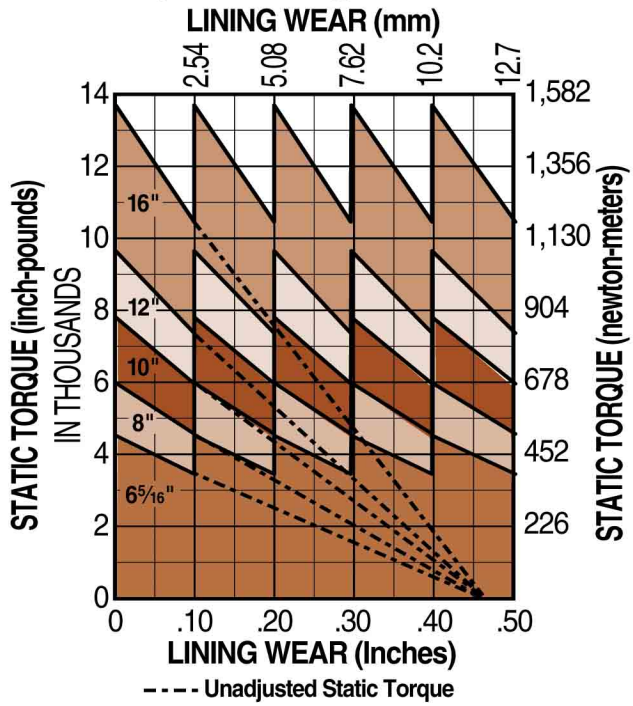

Tangential Force

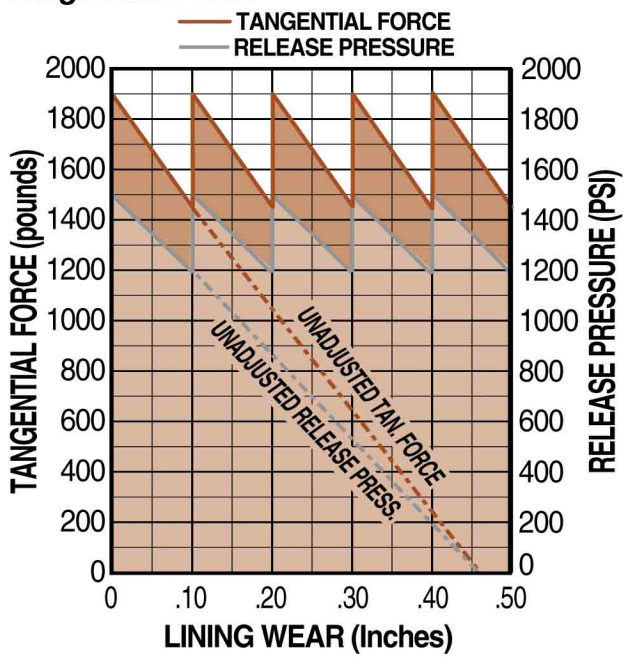

DISC SIZING EQUATIONS

STATIC (PARKING) TORQUE (IN.-LBS.) = **TANGENTIAL FORCE** (LBS.) x **BRAKING RADIUS** (IN.)

Caliper Disc Brakes

FS220CI SERIES - DUCTILE IRON

SINGLE ACTING WITH FLOATING BRACKET

FLOATING MOUNT - FIXED DISC

Accommodates disc thickness:	5/32"	1/4"	3/8"	1/2"
Weight	20.0 lbs.	9.07 kgs.		

STANDARD MODELS

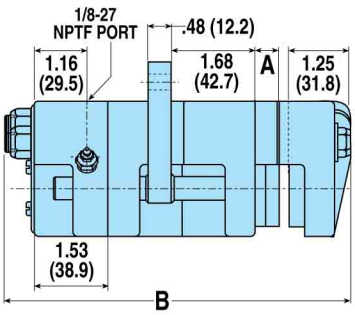

JK OPTION MODELS

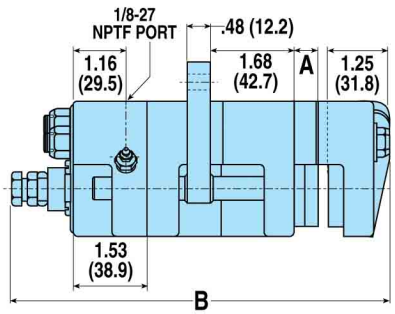

MODEL CODE	DISC THK.	A	B	OPTIONS / DESCRIPTION	ASSEMBLY NUMBER
FS220CIA	5/32"	—	6.77"	Floating Bracket, "C" Strength	0741-0005
FS220CIB	1/4"	.093"	6.77"	Floating Bracket, "C" Strength	0741-0006
FS220CIL	3/8"	.218"	7.27"	Floating Bracket, "C" Strength	0741-0007
FS220CIE	1/2"	.344"	7.27"	Floating Bracket, "C" Strength	0741-0008
FS220CIAJK	5/32"	.562"	7.96"	Ftg Bkt,"C"Stgh,ManRet,ManComp	0741-0009
FS220CIBJK	1/4"	.656"	8.06"	Ftg Bkt,"C"Stgh,ManRet,ManComp	0741-0010
FS220CILJK	3/8"	.780"	8.18"	Ftg Bkt,"C"Stgh,ManRet,ManComp	0741-0011
FS220CIEJK	1/2"	.906"	8.32"	Ftg Bkt,"C"Stgh,ManRet,ManComp	0741-0012

MOUNTING DIMENSIONS

Disc Diameter		6.313"	8"	10"	12"	16"
Braking Radius		2.38"	3.15"	4.11"	5.08"	7.21"
	C	4.30"	5.17"	6.17"	7.17"	9.17"
	D	3.45"	4.32"	5.32"	6.32"	8.41"
	E	3.07"	3.94"	4.94"	5.94"	8.03"
	F	2.13"	3.00"	4.00"	5.00"	7.09"

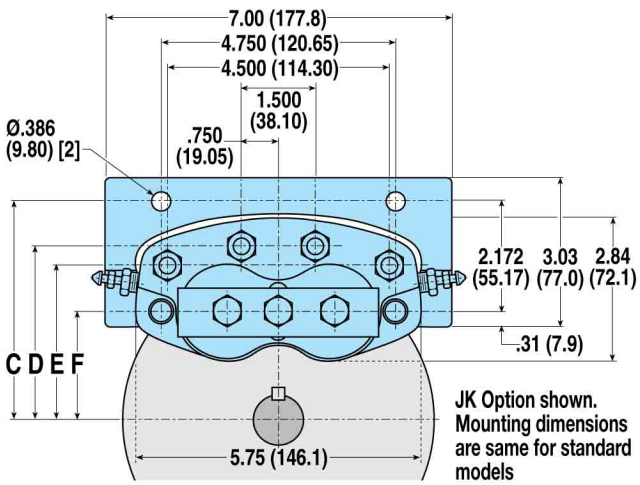

JK Option shown. Mounting dimensions are same for standard models

Caliper Disc Brakes

FS595 SERIES - DUCTILE IRON

AVAILABLE STYLES

Double Acting

FLOATING MOUNT - FIXED DISC

PICTURED: 0781-0000

FS595 SPECIFICATIONS

Maximum hydraulic pressure:	2,000 PSI non shock
Minimum hydraulic pressure to release brake:	1,400 PSI
Accommodates Tolomatic disc diameters:	16"
Minimum disc diameter:	14"
Maximum disc diameter:	none
Housing Material:	Cast ductile iron
Bolts:	Zinc plated grade 8
Seals:	Buna-N Standard
Wearable friction material:	4.57 cu. in.
Friction material:	Replaceable, high-grade
Total lining area:	9.14 sq. in.
Floating bracket:	Standard
Fluid displacement for .03 inch clearance:	0.230 cu. in.
Recommended wear compensation interval:	.25 in. lining wear
OPTIONS	
Seals:	Viton® seals
Adaptable to thinner discs:	Consult factory

BRAKE MODEL LETTER CODES

C With Bleeder Fittings	**FS** Spring Applied	**O** 1-1/4" Thick Disc
D Double Acting	**I** Iron	**Q** 1-1/2" Thick Disc
E 1/2" Thick Disc	**K** Manual Compensator	**V** Viton® Seals

PERFORMANCE DATA

Static Torque vs Lining Wear

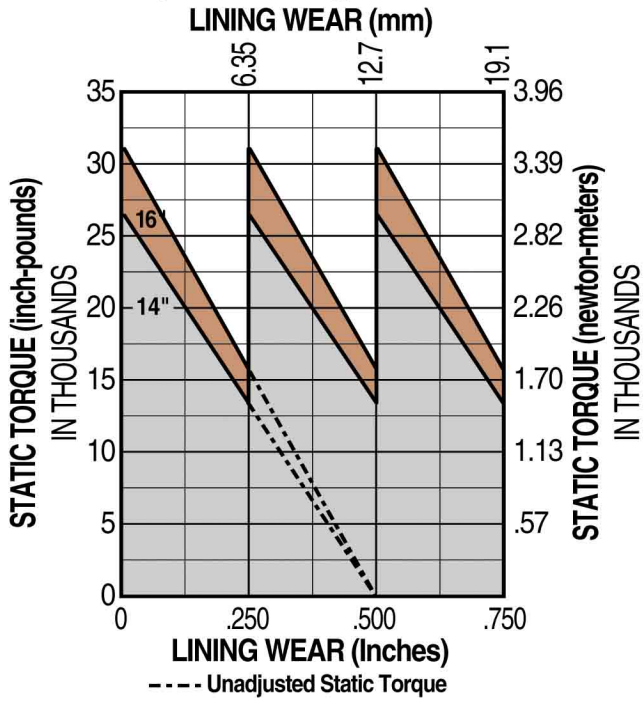

Tangential Force

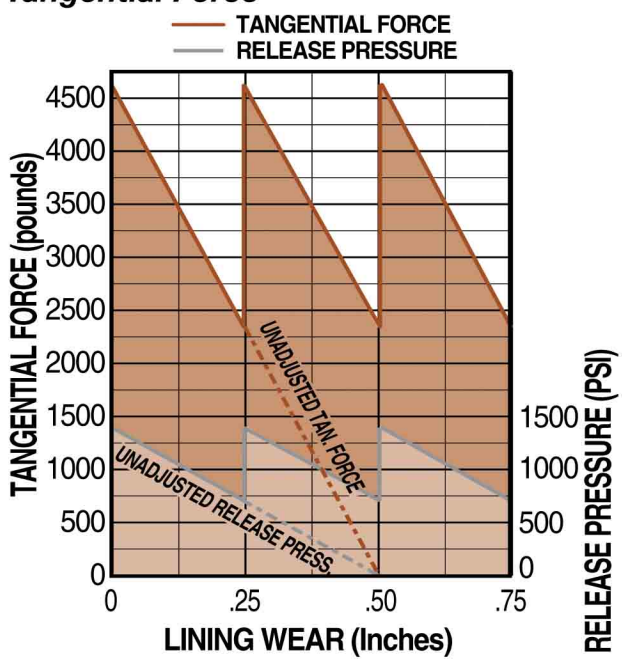

DISC SIZING EQUATIONS

STATIC (PARKING) TORQUE (IN.-LBS.) = **TANGENTIAL FORCE** (LBS.) x **BRAKING RADIUS** (IN.)

BRAKING RADIUS (IN.) = **[DISC DIAMETER ÷ 2] - 1.280**

Caliper Disc Brakes

FS595 SERIES - DUCTILE IRON

DOUBLE ACTING

FIXED MOUNT - FIXED DISC

Accommodates disc thickness:	1/2"	1-1/4"	1-1/2"
Weight	36.0 lbs.	16.33 kgs.	

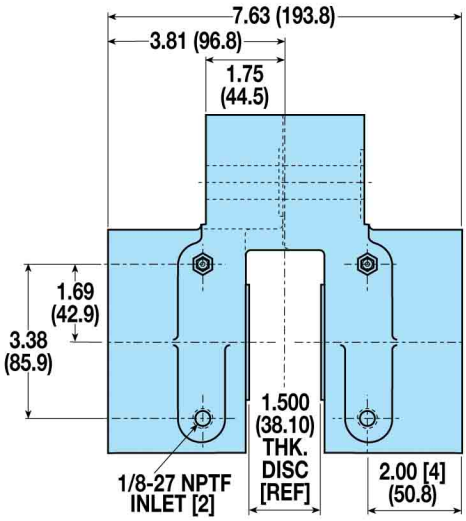

MODEL CODE	DISC THK.	OPTIONS / DESCRIPTION	ASSEMBLY NUMBER
FS595DCIKE	1/2"	Double Acting, Iron, Man Wear Comp	0781-0011
FS595DCIKO	1-1/4"	Double Acting, Iron, Man Wear Comp	0781-0018
FS595DCIKQ	1-1/2"	Double Acting, Iron, Man Wear Comp	0781-0000
FS595DCIKQV	1-1/2"	Dbl Act, Iron, Man Comp, Viton® Seals	0781-0001

MOUNTING DIMENSIONS

Disc Diameter		14"	16"
	A	9.16"	10.16"
Braking Radius	B	5.72"	6.72"

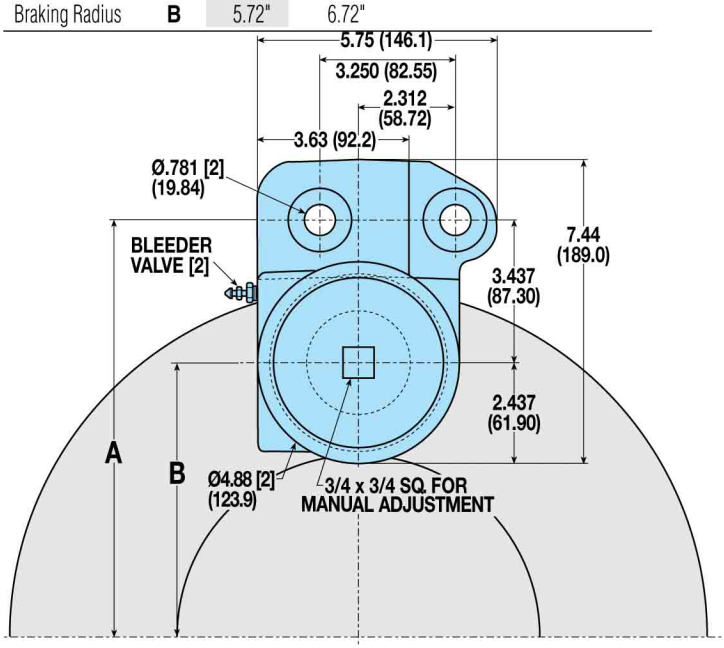

Viton® is a registered trademark of the E.I. Du Pont de Newmours Co., www.dupont.com

SEE NEXT PAGE FOR FS595 DUAL

Caliper Disc Brakes

FS595 DUAL SERIES - DUCTILE IRON

AVAILABLE STYLES

Double Acting

FLOATING MOUNT - FIXED DISC

PICTURED: 0782-0003

FS595 DUAL SPECIFICATIONS

Maximum hydraulic pressure:	2,000 PSI non shock
Minimum hydraulic pressure to release brake:	1,400 PSI
Accommodates Tolomatic disc diameters:	16"
Minimum disc diameter:	14"
Maximum disc diameter:	none
Housing Material:	Cast ductile iron
Bolts:	Zinc plated grade 8
Seals:	Buna-N Standard
Wearable friction material:	4.57 cu. in.
Friction material:	Replaceable, high-grade
Total lining area:	9.14 sq. in.
Floating bracket:	Standard
Fluid displacement for .03 inch clearance:	0.460 cu. in.
Recommended wear compensation interval:	.25 in. lining wear
OPTIONS	
Adaptable to thinner discs:	Consult factory

BRAKE MODEL LETTER CODES

C With Bleeder Fittings	**FS** Spring Applied	**L** 3/8" Thick Disc
D Double Acting	**I** Iron	**N** 1" Thick Disc
E 1/2" Thick Disc	**K** Manual Compensator	**Q** 1-1/2" Thick Disc

PERFORMANCE DATA

Static Torque vs Lining Wear

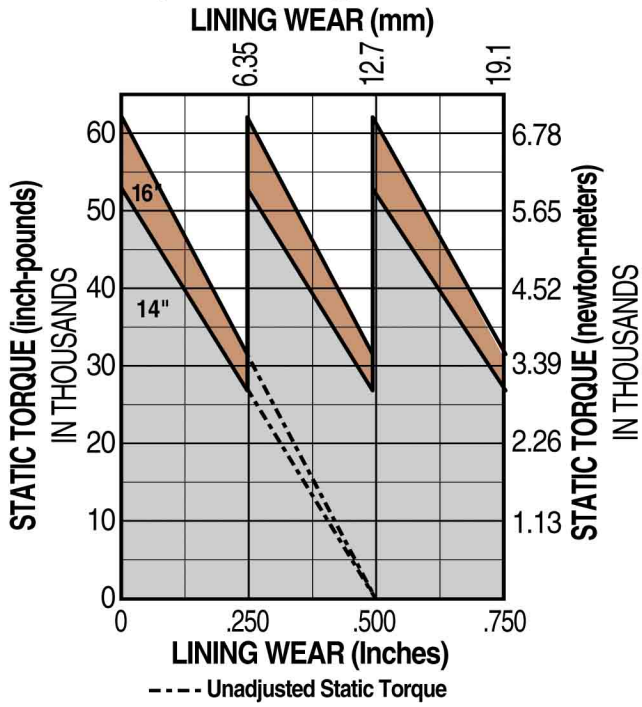

Tangential Force

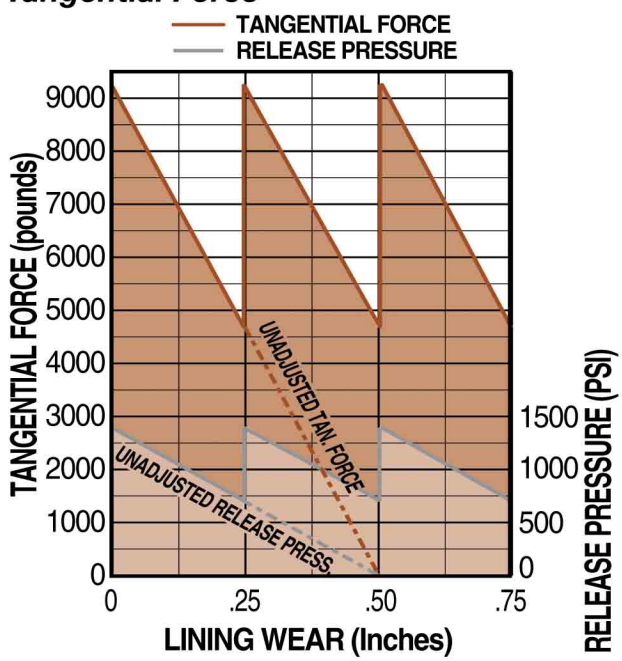

DISC SIZING EQUATIONS

STATIC (PARKING) TORQUE (IN.-LBS.) = **TANGENTIAL FORCE** (LBS.) x **BRAKING RADIUS** (IN.)

BRAKING RADIUS (IN.) = **[DISC DIAMETER ÷ 2] - 1.280**

Caliper Disc Brakes

FS595 DUAL SERIES - DUCTILE IRON

DOUBLE ACTING

FIXED MOUNT - FIXED DISC

Accommodates disc thickness:	3/8"	1/2"	1"	1-1/2"
Weight	72.0 lbs.	32.66 kgs.		

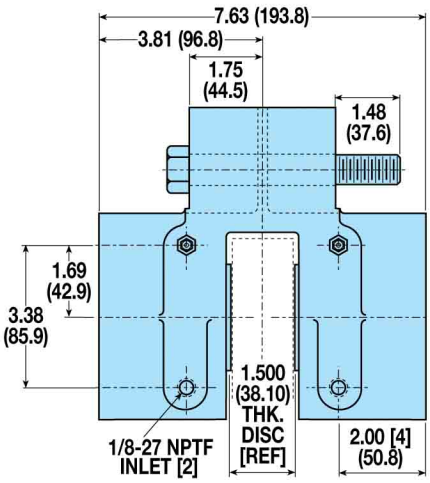

MODEL CODE	DISC THK.	OPTIONS / DESCRIPTION	ASSEMBLY NUMBER
FS595DCIKL-Dual	3/8"	DUAL, Double Acting, Iron, Man Wear Comp	0782-0006
FS595DCIKE-Dual	1/2"	DUAL, Double Acting, Iron, Man Wear Comp	0782-0007
FS595DCIKN-Dual	1"	DUAL, Double Acting, Iron, Man Wear Comp	0782-0008
FS595DCIKQ-Dual	1-1/2"	DUAL, Double Acting, Iron, Man Wear Comp	0782-0003

MOUNTING DIMENSIONS

Disc Diameter		14"	16"
	A	8.58"	9.67"
	B	5.23"	6.23"
Braking Radius	C	5.72"	6.72"

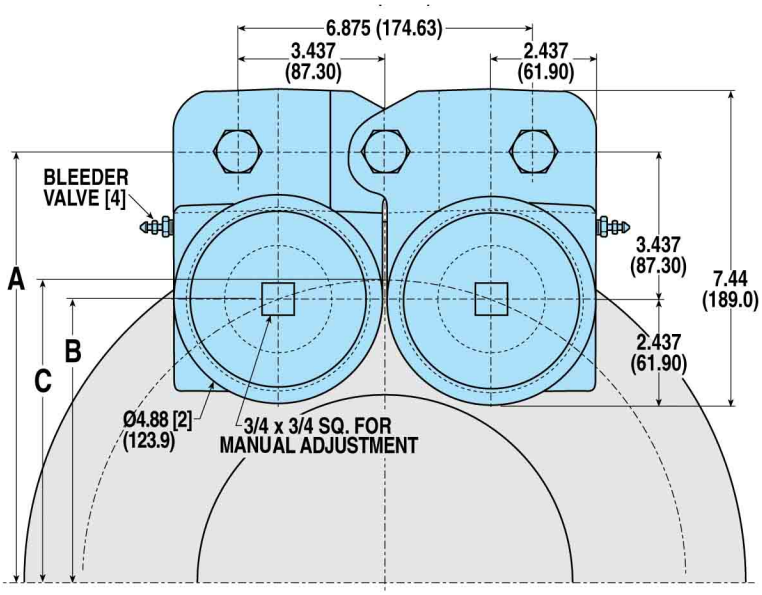

Top View

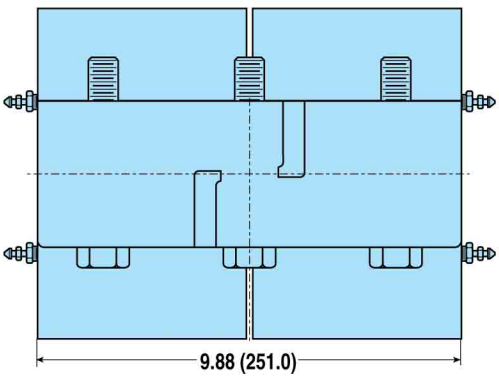

Caliper Disc Brakes

FIXED HUB & DISC ASSEMBLIES

AVAILABLE STYLES

Hub & Disc Assembly

PICTURED: 0802-0020

FIXED HUB & DISC SPECIFICATIONS

Disc material:	Carbon 1010 steel
Disc manufacturing details:	Flat within .010 inch, stress relieved and blanchard ground to an 80 (RMS) micro-inch finish
Hub material:	Machined from cold rolled steel
Included fasteners:	Socket head cap screws Keyway set screws

PERFORMANCE DATA

Maximum Power Capacity

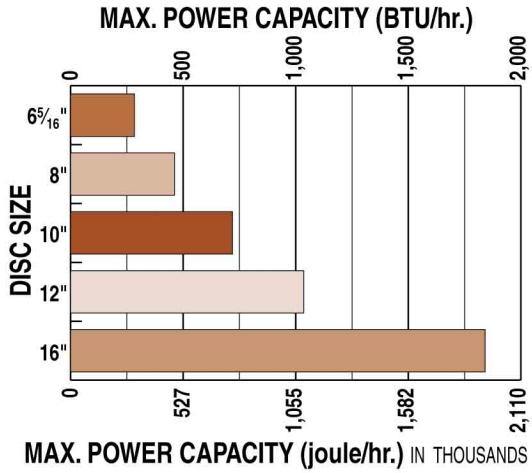

Maximum Torque Ratings

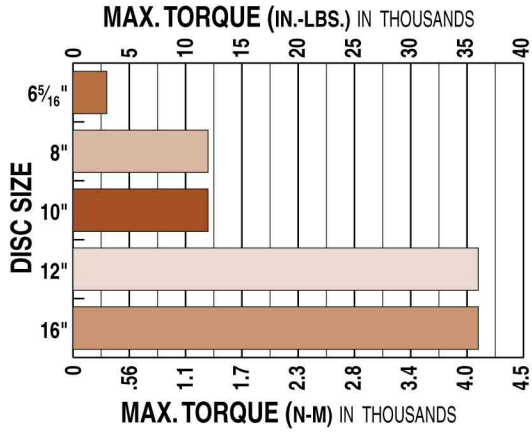

*Single Stop Maximum Energy Absorption Capacities**

**Disc temperature 380° F*

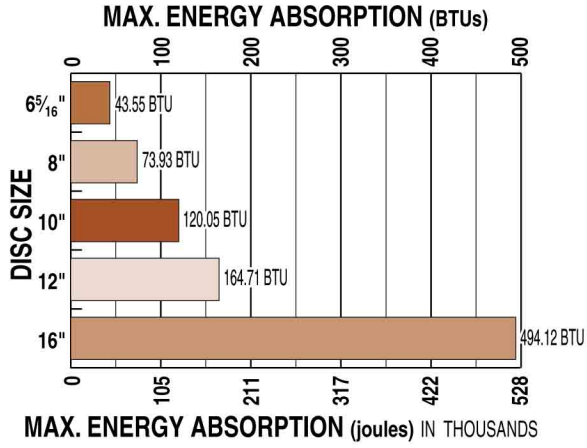

Caliper Disc Brakes

FIXED HUB & DISC ASSEMBLIES

6 5/16" DISC

For use with pneumatic, hydraulic, mechanical or spring applied caliper disc brakes

Weight 1.4 lbs. .64 kgs. Disc Thickness: 0.156"

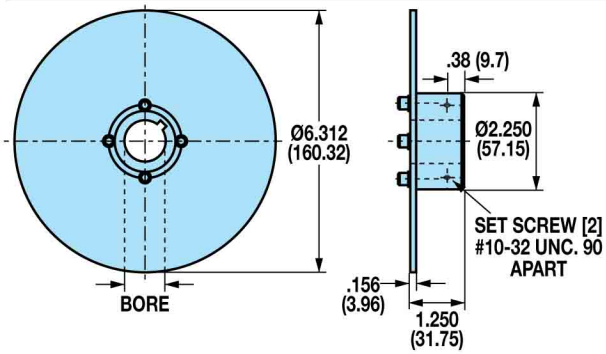

ASSY NO.	BORE	KEY SIZE
0801-0008	.500"	.125" x .125"
0801-0010	.625"	.188" x .188"
0801-0012	.750"	.188" x .188"

ASSY NO.	BORE	KEY SIZE
0801-0014	.875"	.188" x .188"
0801-0016	1.000"	.250" x .250"

10" DISC

For use with pneumatic, hydraulic, mechanical or spring applied caliper disc brakes

Weight 5.5 lbs. 2.49 kgs. Disc Thickness: 0.156"

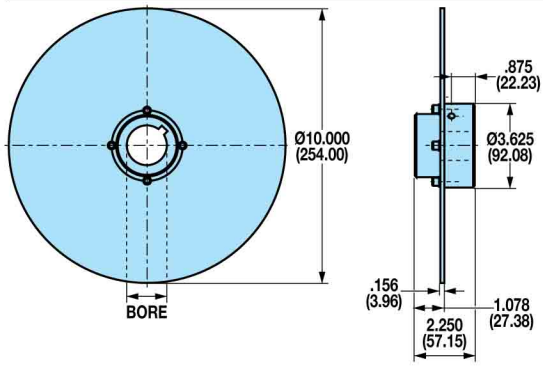

ASSY NO.	BORE	KEY SIZE
0803-0016	1.000"	.250" x .250"
0803-0018	1.125"	.250" x .250"
0803-0020	1.250"	.250" x .250"
0803-0022	1.375"	.313" x .313"

ASSY NO.	BORE	KEY SIZE
0803-0024	1.500"	.375" x .375"
0803-0026	1.625"	.375" x .375"
0803-0028	1.750"	.375" x .375"

8" DISC

For use with pneumatic, hydraulic, mechanical or spring applied caliper disc brakes

Weight 3.5 lbs. 1.59 kgs. Disc Thickness: 0.156"

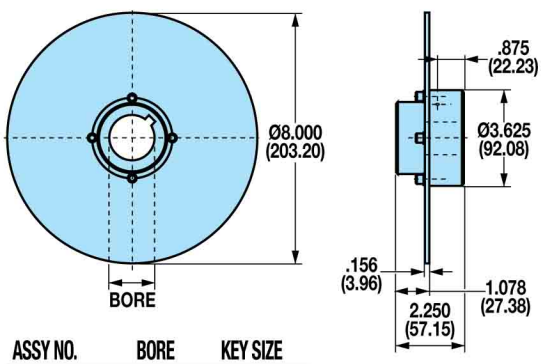

ASSY NO.	BORE	KEY SIZE
0802-0016	1.000"	.250" x .250"
0802-0018	1.125"	.250" x .250"
0802-0020	1.250"	.250" x .250"
0802-0022	1.375"	.313" x .313"

ASSY NO.	BORE	KEY SIZE
0802-0024	1.500"	.375" x .375"
0802-0026	1.625"	.375" x .375"
0802-0028	1.750"	.375" x .375"

12" DISC

For use with pneumatic, hydraulic, mechanical or spring applied caliper disc brakes

Weight 7.9 lbs. 3.58 kgs. Disc Thickness: 0.156"

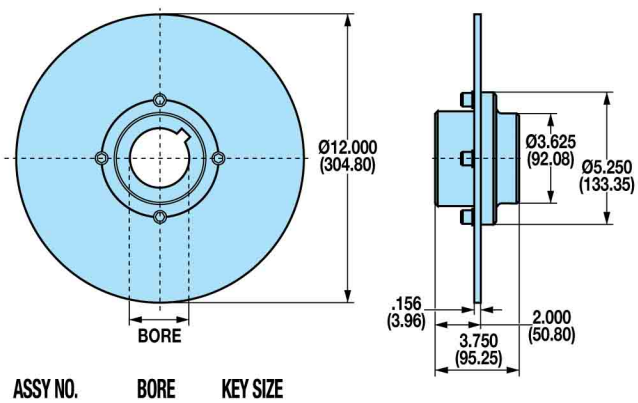

ASSY NO.	BORE	KEY SIZE
0804-0024	1.500"	.375" x .375"
0804-0028	1.750"	.375" x .375"
0804-0032	2.000"	.500" x .500"

ASSY NO.	BORE	KEY SIZE
0804-0036	2.250"	.500" x .500"
0804-0040	2.500"	.625" x .625"

16" DISC

For use with pneumatic, hydraulic, mechanical or spring applied caliper disc brakes

Weight 14.1 lbs. 6.40 kgs. Disc Thickness: 0.250"

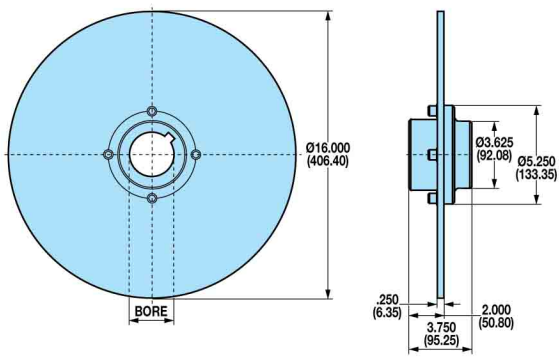

ASSY NO.	BORE	KEY SIZE
0805-0024	1.500"	.375" x .375"
0805-0028	1.750"	.375" x .375"
0805-0032	2.000"	.500" x .500"

ASSY NO.	BORE	KEY SIZE
0805-0036	2.250"	.500" x .500"
0805-0040	2.500"	.625" x .625"

Caliper Disc Brakes

FIXED HUB & DISC ASSEMBLIES WITH QUICK DISCONNECT (Q.D.) BUSHINGS

AVAILABLE STYLES

Hub & Disc Assembly with Quick Disconnect (Q.D.) Bushings

PICTURED: 0808-0114

FIXED HUB & DISC SPECIFICATIONS

Disc material:	Carbon 1010 steel
Disc manufacturing details:	Flat within .010 inch, stress relieved and blanchard ground to an 80 (RMS) micro-inch finish
Bushings:	Upper lock quick disconnect
Included fasteners:	Socket head cap screws Key way set screws

PERFORMANCE DATA

Maximum Torque Ratings

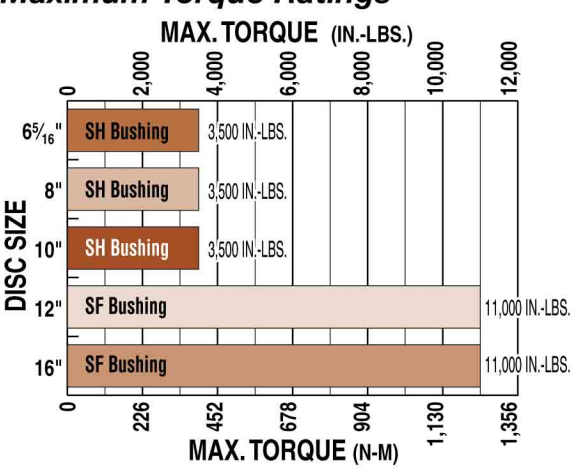

6 5/16" DISC

For use with pneumatic, hydraulic, mechanical or spring applied caliper disc brakes

Weight 2.1 lbs. .95 kgs. Disc Thickness: 0.156"

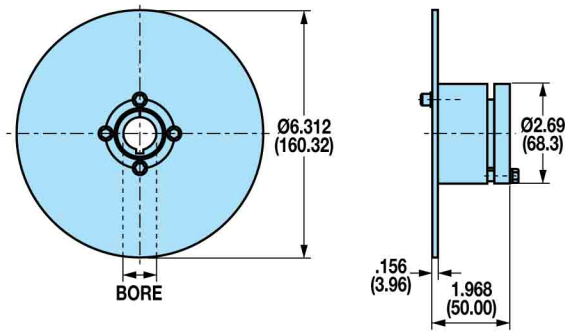

ASSY NO.	BORE	KEY SIZE	ASSY NO.	BORE	KEY SIZE
0801-0109	.563"	.125" x .125"	0801-0114	.875"	.188" x .188"
0801-0110	.625"	.188" x .188"	0801-0115	.938"	.250" x .250"
0801-0111	.688"	.188" x .188"	0801-0116	1.000"	.250" x .250"
0801-0112	.750"	.188" x .188"	0801-0117	1.063"	.250" x .250"

8" DISC

For use with pneumatic, hydraulic, mechanical or spring applied caliper disc brakes

Weight 2.8 lbs. 1.27 kgs. Disc Thickness: 0.156"

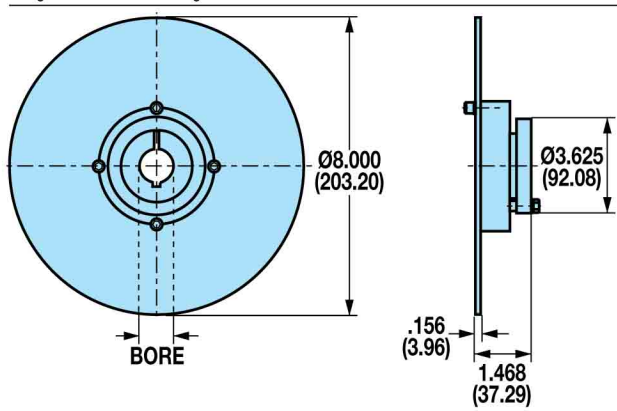

ASSY NO.	BORE	KEY SIZE	ASSY NO.	BORE	KEY SIZE
0802-0108	.500"	.125" x .125"	0802-0117	1.063"	.250" x .250"
0802-0109	.563"	.125" x .125"	0802-0118	1.125"	.250" x .250"
0802-0110	.625"	.188" x .188"	0802-0119	1.188"	.250" x .250"
0802-0111	.688"	.188" x .188"	0802-0120	1.250"	.250" x .250"
0802-0112	.750"	.188" x .188"	0802-0121	1.313"	.313" x .313"
0802-0113	.813	.188" x .188"	0802-0122	1.375"	.313" x .313"
0802-0114	.875"	.188" x .188"	0802-0123	1.438"	.375" x .250"*
0802-0115	.938"	.250" x .250"	0802-0124	1.500"	.375" x .250"*
0802-0116	1.000"	.250" x .250"	0802-0125	1.563"	.375" x .250"*

*NON-STANDARD KEYS ARE SUPPLIED ALONG WITH HUB AND DISC ASSEMBLIES

Caliper Disc Brakes

FIXED HUB & DISC ASSEMBLIES WITH QUICK DISCONNECT (Q.D.) BUSHINGS

10" DISC

For use with pneumatic, hydraulic, mechanical or spring applied caliper disc brakes

Weight 4.1 lbs. 1.86 kgs. Disc Thickness: 0.156"

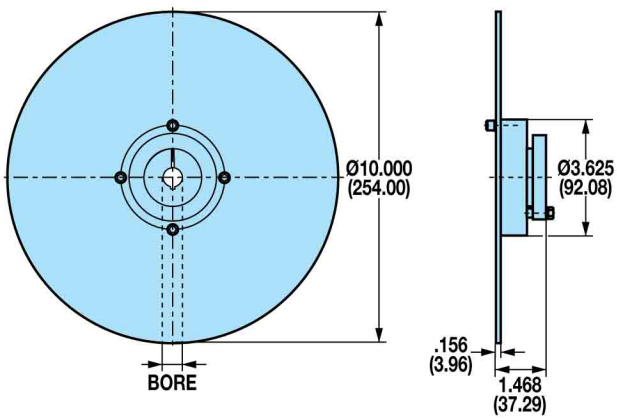

ASSY NO.	BORE	KEY SIZE
0803-0110	.625"	.188" x .188"
0803-0111	.688"	.188" x .188"
0803-0112	.750"	.188" x .188"
0803-0114	.875"	.188" x .188"
0803-0115	.938"	.250" x .250"
0803-0116	1.000"	.250" x .250"
0803-0117	1.063"	.250" x .250"
0803-0118	1.125"	.250" x .250"

ASSY NO.	BORE	KEY SIZE
0803-0119	1.188"	.250" x .250"
0803-0120	1.250"	.250" x .250"
0803-0121	1.313"	.313" x .313"
0803-0122	1.375"	.313" x .313"
0803-0123	1.438"	.375" x .250"*
0803-0124	1.500"	.375" x .250"*
0803-0125	1.563"	.375" x .250"*

***NON-STANDARD KEYS ARE SUPPLIED ALONG WITH HUB AND DISC ASSEMBLIES**

12" DISC

For use with pneumatic, hydraulic, mechanical or spring applied caliper disc brakes

Weight 9.3 lbs. 4.22 kgs. Disc Thickness: 0.156"

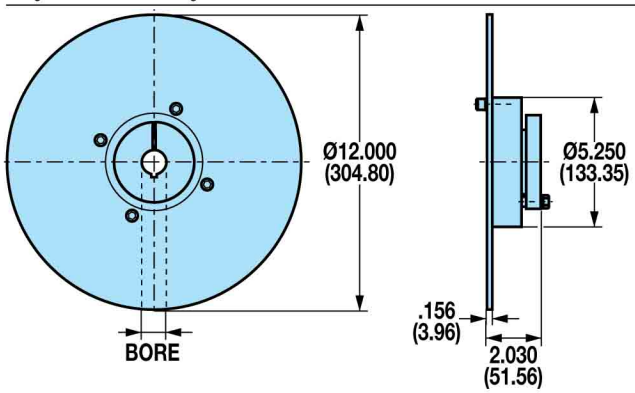

ASSY NO.	BORE	KEY SIZE
0804-0108	.500"	.125" x .125"
0804-0112	.750"	.188" x .188"
0804-0114	.875"	.188" x .188"
0804-0115	.938"	.250" x .250"
0804-0116	1.000"	.250" x .250"
0804-0117	1.063"	.250" x .250"
0804-0118	1.125"	.250" x .250"
0804-0119	1.188"	.250" x .250"
0804-0120	1.250"	.250" x .250"
0804-0121	1.313"	.313" x .313"
0804-0122	1.375"	.313" x .313"
0804-0123	1.438"	.375" x .375"
0804-0124	1.500"	.375" x .375"
0804-0125	1.563"	.375" x .375"
0804-0126	1.625"	.375" x .375"
0804-0127	1.688"	.375" x .375"

ASSY NO.	BORE	KEY SIZE
0804-0128	1.750"	.375" x .375"
0804-0130	1.875"	.500" x .500"
0804-0131	1.938"	.500" x .500"
0804-0132	2.000	.500" x .500"
0804-0133	2.063	.500" x .500"
0804-0134	2.125"	.500" x .500"
0804-0135	2.188"	.500" x .500"
0804-0136	2.250"	.500" x .500"
0804-0137	2.313"	.500" x .625"*
0804-0138	2.375"	.500" x .625"*
0804-0139	2.438"	.500" x .625"*
0804-0140	2.500"	.500" x .625"*
0804-0141	2.563"	.375" x .625"*
0804-0142	2.625"	.375" x .625"*
0804-0143	2.688"	.375" x .625"*
0804-0144	2.750"	.375" x .625"*

16" DISC

For use with pneumatic, hydraulic, mechanical or spring applied caliper disc brakes

Weight 18.1 lbs. 8.21 kgs. Disc Thickness: 0.250"

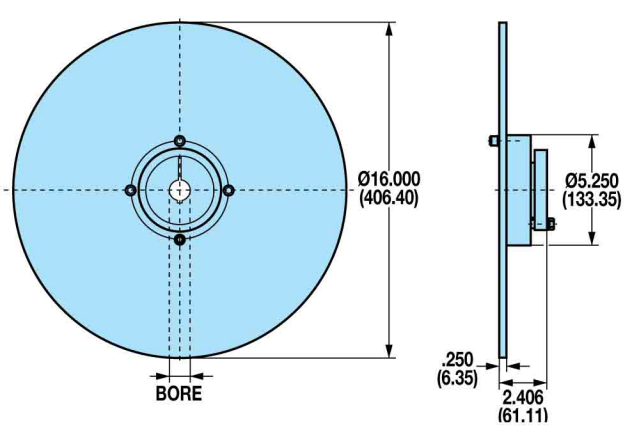

ASSY NO.	BORE	KEY SIZE
0805-0108	.500"	.125" x .125"
0805-0112	.750"	.188" x .188"
0805-0114	.875"	.188" x .188"
0805-0116	1.000"	.250" x .250"
0805-0117	1.063"	.250" x .250"
0805-0118	1.125"	.250" x .250"
0805-0119	1.188"	.250" x .250"
0805-0120	1.250"	.250" x .250"
0805-0121	1.313"	.313" x .313"
0805-0122	1.375"	.313" x .313"
0805-0123	1.438"	.375" x .375"
0805-0124	1.500"	.375" x .375"
0805-0125	1.563"	.375" x .375"
0805-0126	1.625"	.375" x .375"

ASSY NO.	BORE	KEY SIZE
0805-0128	1.750"	.375" x .375"
0805-0130	1.875"	.500" x .500"
0805-0131	1.938"	.500" x .500"
0805-0132	2.000	.500" x .500"
0805-0134	2.125"	.500" x .500"
0805-0135	2.188"	.500" x .500"
0805-0137	2.313"	.500" x .625"*
0805-0138	2.375"	.500" x .625"*
0805-0139	2.438"	.500" x .625"*
0805-0140	2.500"	.500" x .625"*
0805-0141	2.563"	.375" x .625"*
0805-0143	2.688"	.375" x .625"*
0805-0144	2.750"	.375" x .625"*

Caliper Disc Brakes

QUICK DISCONNECT (Q.D.) BUSHINGS & HUBS

AVAILABLE STYLES

Quick Disconnect (Q.D.) Bushings must be used with Quick Disconnect (Q.D.) Hubs

PICTURED: 0801-1151

PICTURED: 0801-1119

Q.D. BUSHING - 6⁵⁄₁₆" DISC (SH)

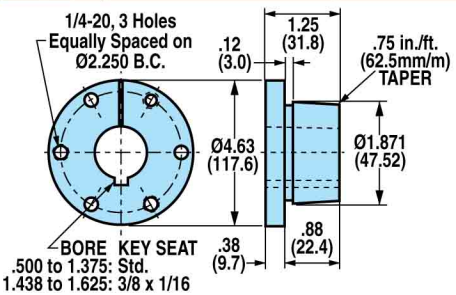

ASSY. NO.	TYPE	BORE	KEY SIZE	WT. (LBS.)	WT. (KGS.)
0801-1123	SH	.563"	.125" x .125"	0.9	.41
0801-1125	SH	.688"	.188" x .188"	0.8	.36
0801-1126	SH	.750"	.188" x .188"	0.8	.36
0801-1127	SH	.813"	.188" x .188'	0.8	.36
0801-1128	SH	.875"	.188" x .188"	0.8	.36
0801-1129	SH	.938"	.250" x .250"	0.8	.36
0801-1131	SH	1.000"	.250" x .250"	0.7	.32
0801-1132	SH	1.063"	.250" x .250"	0.7	.32
0801-1133	SH	1.125"	.250" x .250"	0.7	.32

Q.D. HUB - 6⁵⁄₁₆" DISC (SH)

For use with quick disconnect (Q.D.) bushing

0801-1119 Weight 1.2 lbs. .54 kgs.

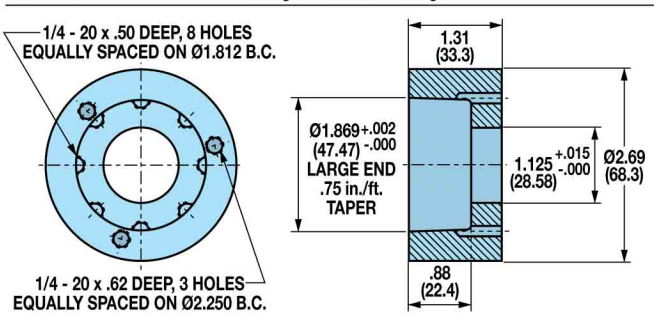

Q.D. BUSHING - 8" & 10" DISC (SH)

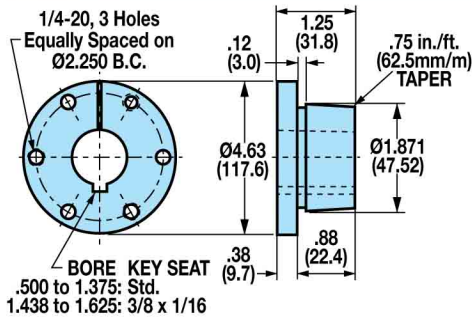

ASSY. NO.	TYPE	BORE	KEY SIZE	WT. (LBS.)	WT.(KGS.)
0801-1122	SH	.500"	.125" x .125"	0.9	.41
0801-1123	SH	.563"	.125" x .125"	0.9	.41
0801-1124	SH	.625"	.188" x .188"	0.9	.41
0801-1125	SH	.688"	.188" x .188"	0.8	.36
0801-1126	SH	.750"	.188" x .188"	0.8	.36
0801-1127	SH	.813"	.188" x .188"	0.8	.36
0801-1128	SH	.875"	.188" x .188"	0.8	.36
0801-1129	SH	.938"	.250" x .250"	0.8	.36
0801-1131	SH	1.000"	.250" x .250"	0.7	.32
0801-1132	SH	1.063"	.250" x .250"	0.7	.32
0801-1133	SH	1.125"	.250" x .250"	0.7	.32
0801-1134	SH	1.188"	.250" x .250"	0.6	.27
0801-1135	SH	1.250"	.250" x .250"	0.6	.27
0801-1136	SH	1.313"	.313" x .313"	0.5	.23
0801-1137	SH	1.375"	.313" x .313"	0.5	.23
0801-1138	SH	1.438"	.375" x .250"*	0.5	.23
0801-1139	SH	1.500"	.375" x .250"*	0.4	.18
0801-1140	SH	1.563"	.375" x .250"*	0.4	.18
0801-1141	SH	1.625"	.375" x .250"*	0.4	.18

*NON-STANDARD KEYS ARE SUPPLIED ALONG WITH HUB AND DISC ASSEMBLIES

Q.D. HUB - 8" & 10" DISC (SH)

For use with quick disconnect (Q.D.) bushing

0802-1137 Weight 1.6 lbs. .73 kgs.

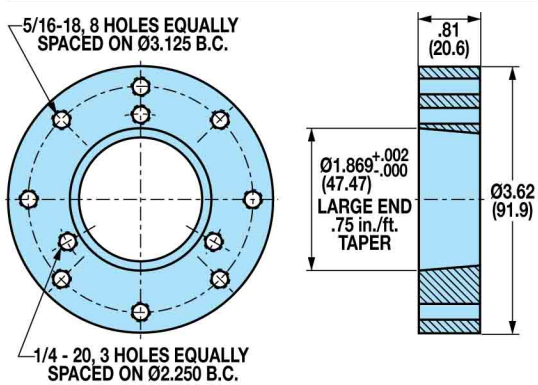

Caliper Disc Brakes

QUICK DISCONNECT (Q.D.) BUSHINGS & HUBS

Q.D. BUSHING INSTALLATION

When a wrench or length of pipe is used to increase leverage in tightening bushing screws, it is imperative to adhere to the wrench torque values given below.

When mounting the bushing, the tightening force on the screws is multiplied many times by the wedging action of the tapered surface. This action compresses the bushing for a snug fit on the shaft. The bushing screws should always be tightened alternately and progressively.

BUSHING	WRENCH TORQUE (IN.-LBS.)	WRENCH LENGTH (INCHES)	WRENCH PULL (POUNDS)
SH	108	4	27
SF	360	6	60

Q.D. BUSHING - 12" & 16" DISC (SF)

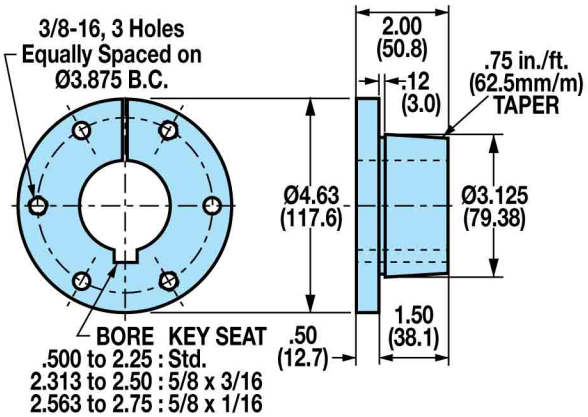

ASSY. NO.	TYPE	BORE	KEY SIZE	WT. (LBS.)	WT. (KGS.)
0801-1142	SF	.500"	.125" x .125"	4.9	2.22
0801-1143	SF	.563"	.125" x .125"	4.9	2.22
0801-1144	SF	.625"	.188" x .188"	4.8	2.18
0801-1145	SF	.688"	.188" x .188"	4.8	2.18
0801-1146	SF	.750"	.188" x .188"	4.8	2.18
0801-1147	SF	.813"	.188" x .188"	4.7	2.13
0801-1148	SF	.875"	.188" x .188"	4.7	2.13
0801-1149	SF	.938"	.250" x .250"	4.6	2.09
0801-1150	SF	1.000"	.250" x .250"	4.6	2.09
0801-1151	SF	1.063"	.250" x .250"	4.5	2.04
0801-1152	SF	1.125"	.250" x .250"	4.5	2.04
0801-1153	SF	1.188"	.250" x .250"	4.4	2.00
0801-1154	SF	1.250"	.250" x .250"	4.4	2.00
0801-1155	SF	1.313"	.313" x .313"	4.3	1.95
0801-1156	SF	1.375"	.313" x .313"	4.2	1.91
0801-1157	SF	1.438"	.375" x .375"	4.1	1.86
0801-1158	SF	1.500"	.375" x .375"	4.0	1.81
0801-1159	SF	1.563"	.375" x .375"	4.0	1.81
0801-1160	SF	1.625"	.375" x .375"	3.9	1.77
0801-1161	SF	1.688"	.375" x .375"	3.8	1.72
0801-1162	SF	1.750"	.375" x .375"	3.7	1.68
0801-1163	SF	1.875"	.500" x .500"	3.5	1.59
0801-1164	SF	1.938"	.500" x .500"	3.4	1.54
0801-1165	SF	2.000"	.500" x .500"	3.3	1.50
0801-1166	SF	2.063"	.500" x .500"	3.2	1.45
0801-1167	SF	2.125"	.500" x .500"	3.1	1.41
0801-1168	SF	2.188"	.500" x .500"	3.0	1.36
0801-1169	SF	2.250"	.500" x .500"	2.9	1.32
0801-1170	SF	2.313"	.500" x .625"*	2.9	1.32
0801-1171	SF	2.375"	.500" x .625"*	2.8	1.27
0801-1172	SF	2.438"	.500" x .625"*	2.7	1.22
0801-1173	SF	2.500"	.500" x .625"*	2.6	1.18
0801-1174	SF	2.563"	.375" x .625"*	2.4	1.09
0801-1175	SF	2.625"	.375" x .625"*	2.3	1.04
0801-1176	SF	2.688"	.375" x .625"*	2.2	1.00
0801-1177	SF	2.750"	.375" x .625"*	2.0	.91
0801-1178	SF	2.812"	NONE	1.8	.82
0801-1179	SF	2.937"	NONE	1.5	.68

Q.D. HUB - 12" & 16" DISC (SF)

For use with quick disconnect (Q.D.) bushing

0804-1141 Weight 4.70 lbs. 2.13 kgs.

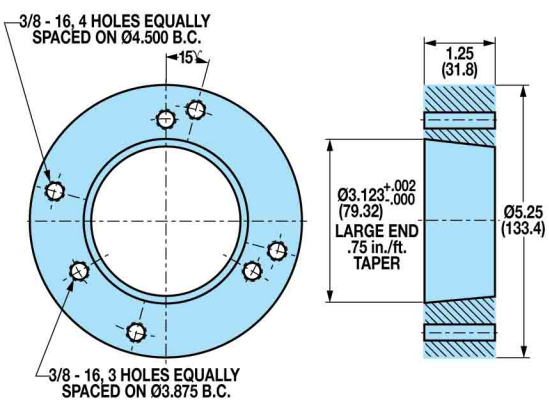

*NON-STANDARD KEYS ARE SUPPLIED ALONG WITH HUB AND DISC ASSEMBLIES

Caliper Disc Brakes

ONE-PIECE HUB AND DISC

AVAILABLE STYLES

One-Piece Hub and Disc

PICTURED: 0801-1210

ONE-PIECE HUB & DISC SPECIFICATIONS

Disc material:	Grey cast iron (G3000)
Disc manufacturing details:	Flat within .010 inch, 80 (RMS) micro-inch finish
Included fasteners:	none

6" DISC

For use with pneumatic, hydraulic, mechanical or spring applied caliper disc brakes

Weight 1.8 lbs. .82 kgs. Disc Thickness: 0.187"

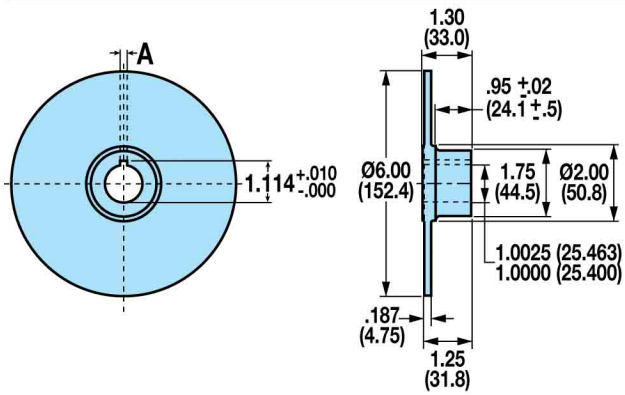

ASSY. NO.	BORE	KEY SIZE	DIM "A"
0801-1210	1.000"	.188" x .188"	.190" / .188"
0801-1211	1.000"	.25" x .125"	.253" / .251"

BLANK DISC

AVAILABLE STYLES

Blank Disc

PICTURED: 0801-1200

BLANK DISC SPECIFICATIONS

Disc material:	SAE 1010-1020 CRS
Disc manufacturing details:	Flat within .010 inch, 80 (RMS) micro-inch finish
Included fasteners:	none

6 5/16", 8", 10", 12" & 16" DISCS

For use with pneumatic, hydraulic, mechanical or spring applied caliper disc brakes

NO DIMENSIONAL DRAWING REQUIRED

ASSY. NO.	DISC DIAMETER	DISC THICKNESS	WT. (LBS.)	WT. (KGS.)
0801-1200	6.313"	.156"	1.3	.59
0802-1200	8.000"	.156"	2.2	1.00
0803-1200	10.000"	.156"	3.4	1.54
0804-1200	12.000"	.156"	4.8	2.18
0805-1200	16.000"	.250"	13.7	6.21

DISC WITH BOLT CIRCLES & PILOT HOLE

AVAILABLE STYLES

Disc with Bolt Circles & Pilot Hole

PICTURED: 0801-1208

DISC SPECIFICATIONS

Disc material:	SAE 1010-1020 CRS
Disc manufacturing details:	Flat within .010 inch, 80 (RMS) micro-inch finish
Included fasteners:	none

6 5/16", 8", 10", 12" & 16" DISCS

For use with pneumatic, hydraulic, mechanical or spring applied caliper disc brakes

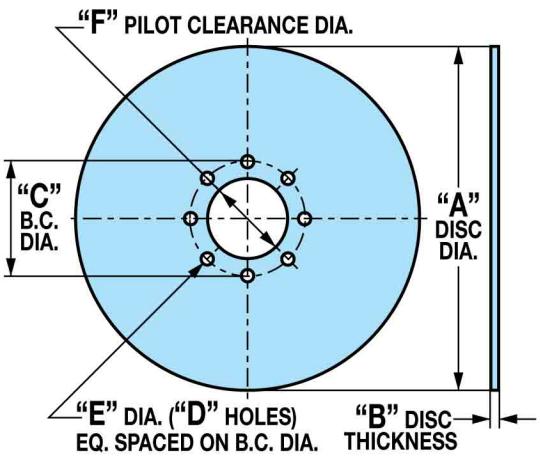

ASSEMBLY NUMBER	"A" DISC DIA.	"B" DISC THK	"C" B.C. DIA.	"D" NO. OF BOLT HOLES	"E" HOLE DIA.	"F" PILOT CLEAR. DIA.
0801-1206	6.313"	.156"	1.812"	8	.332"	1.376"
0802-1208	8.000"	.156"	3.125"	8	.343"	2.375"
0803-1210	10.000"	.156"	3.125"	8	.343"	2.375"
0804-1212	12.000"	.156"	4.500"	4	.406"	3.750"
0805-1216	16.000"	.250"	4.500"	4	.406"	3.750"
0805-1220	16.000"	.500"	4.500"	4	.406"	3.750"

INTENSIFIER

AVAILABLE STYLES

Intensifier

PICTURED: 1770-0000

NOTE: NOT FOR USE WITH SPRING APPLIED OR SPRING RETRACTING CALIPER DISC BRAKES

INTENSIFIER SPECIFICATIONS

INPUT:	Pneumatic pressure, maximum:	100 PSI
	Piston seal:	U-cup design
	Cylinder material:	Hard coated aluminum
	Input to output ratio:	1 : 10
OUTPUT:	Hydraulic pressure, maximum:	1,000 PSI
	Hydraulic fluid displacement:	0.44 cu. in.
	Cylinder seal:	O-ring, Buna-N
	Cylinder material:	Aluminum
	1/8 NPT Port:	Standard, for oil reservoir and/or pressure gauge

Options:

Hydraulic cylinder seal:	O-ring, EPR
Hydraulic cylinder seal:	O-ring, Viton®

INTENSIFIER KIT

For use with non-spring retracting hydraulic caliper disc brakes, Tolomatic series: H10, H20, H/ME20, H220, H/ME220

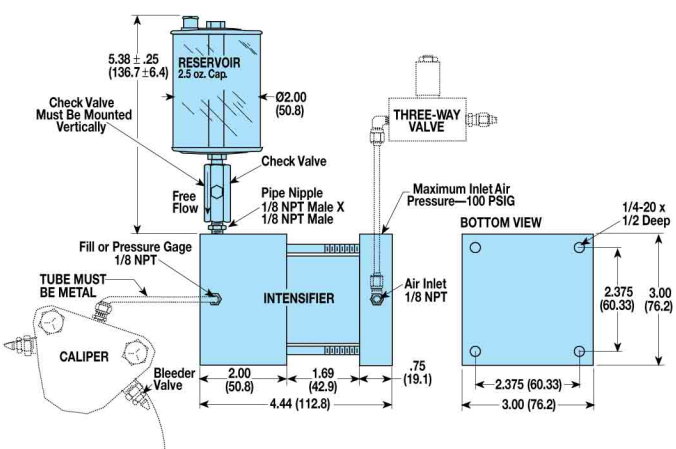

ASSEMBLY NUMBER	SEAL TYPE	KIT INCLUDES:	INTENSIFIER NUMBER
1770-0002	Buna-N	Intensifier, reservoir, check valve & pipe nipple	1770-0000
1770-0003	EPR	Intensifier, reservoir, check valve & pipe nipple	1770-0001
1770-0004	Viton®	Intensifier, reservoir, check valve & pipe nipple	1770-0005

Caliper Disc Brakes

TENSION CONTROL COMBINATIONS

AVAILABLE STYLES

Ventilated Disc

FIXED MOUNT - FIXED DISC

PICTURED: 0803-1214

DISC PERFORMANCE DATA

Thermal Dissipative Capacity of Ventilated Disc

(BASED ON A MAXIMUM DISC TEMPERATURE OF 375°F AND AN AMBIENT TEMPERATURE OF 75°F)

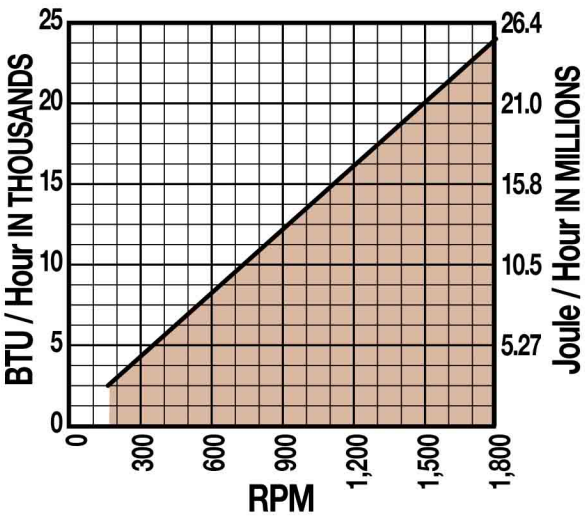

11" DISC

For use with hydraulic caliper disc brakes

Weight 15.4 lbs. 6.99 kgs. Disc Thickness: 1.20"

SEE CALIPER & DISC DRAWING AT RIGHT FOR DISC DIMENSIONS

ASSY. NO.	DESCRIPTION	COMPONENTS INCLUDED
0803-0202	Ventilated Disc Assembly	Ventilated Disc, Pilot Plate HHCS (1/2"-13 x 1-1/2")[5], Lockwashers [5]

PERFORMANCE DATA

PERFORMANCE DATA GRAPHS ARE REPEATED FROM: PAGE 36 - PNEUMATIC PAGE 42 - HYDRAULIC

P220 CALIPER

Dynamic Torque vs Pressure

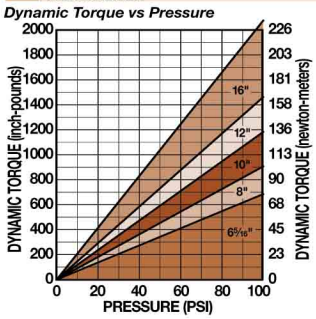

H220 CALIPER

Dynamic Torque vs Pressure

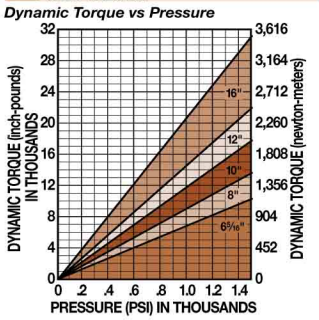

Static Torque vs Pressure

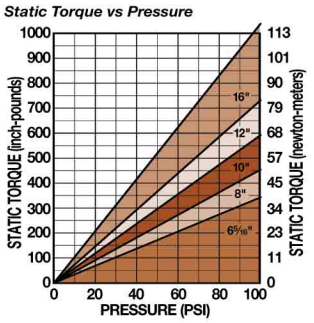

Static Torque vs Pressure

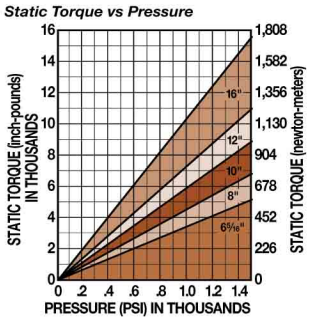

CALIPER & DISC

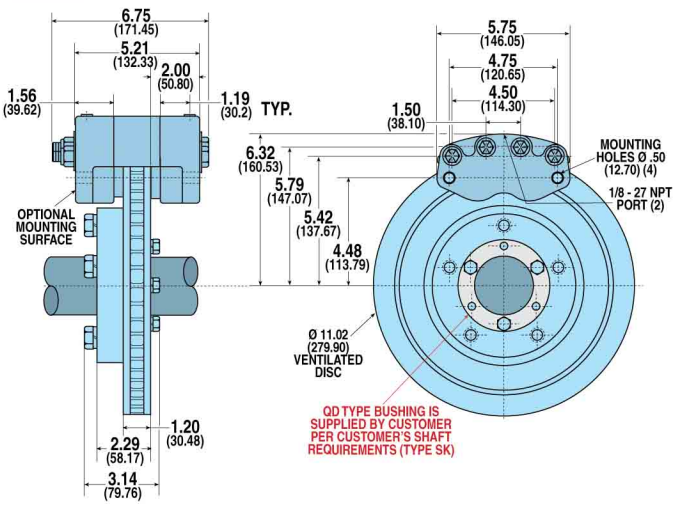

Calipers for Ventilated Disc

ASSY. NO.	MODEL CODE	DESCRIPTION
0735-0304	P220DX	Pneumatic, Double Acting
0735-0704	P220DX	Pneumatic, Double Acting w/Segmented Pucks
0735-0312	H220DXC	Hydraulic, Double Acting w/Bleeder Fittings

DISC SIZING EQUATIONS

DYNAMIC TORQUE (IN.-LBS.) = **2.88 x BRAKING RADIUS** (IN.) **x PRESSURE** (PSI)
STATIC (PARKING) TORQUE (IN.-LBS.) = **1.44 x BRAKING RADIUS** (IN.) **x PRESSURE** (PSI)

BRAKE MODEL LETTER CODES

C w/ bleeder fittings	**H** Hydraulic	**X** Non-standard Disc Thickness
D Dual Acting	**P** Pneumatic	

Caliper Disc Brakes

SELECTION: GENERAL

HOW CALIPER DISC BRAKES WORK

Basically, a caliper disc brake functions like an ordinary rod cylinder. Components consist of a piston, a puck (or pad) of wearable friction material, a housing, and opposing side and a disc on which the brake acts. When pressure is applied to the piston, the puck is moved into contact with the disc, causing the disc to stop rotating or, in a tensioning application, to supply constant drag. The housing contains the piston and puck and is located above the disc. There are always two sides to a caliper disc brake: One is known as the "live side" with the piston and puck; the other may be either another "live side" or it may be a "dead side" (another puck which contacts the disc when the "live side" piston is actuated).

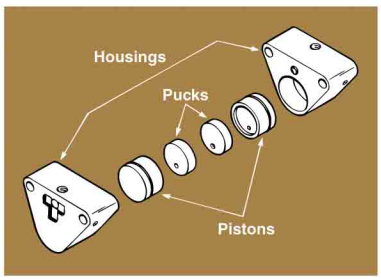

Disc brakes are widely used in three areas: Stopping, retarding (tensioning) and holding. In any application it is necessary to determine how much torque is required, how much heat will be generated (and thus, to be dissipated) and the anticipated service life of the linings. Once these variables are determined, then find the combination of disc and caliper that will most economically meet these requirements.

DETERMINE THE KIND OF BRAKING TO BE DONE

- Industrial
  - Tensioning
  - Constant Slip)
- Vehicular

DETERMINE PRESSURE (LEVER FORCE) AVAILABLE

All torque calculations (except for spring applied brakes) are based on the pressure (lever force) available for your application. Maximum pneumatic pressure for Tolomatic caliper disc brakes is 100 PSI. Maximum hydraulic pressure varies by model between 1,000 PSI and 2,000 PSI. Maximum lever force for mechanical brakes varies with model and lever length. Refer to individual models for pressure (lever force) ratings.

CALCULATE THE TORQUE REQUIRED

For convenience, we express the torque formulae separately for industrial applications, vehicular applications and tensioning applications. See the formulae section (pages 92-95) to determine the torque needed for your application.

CALCULATE HEAT DISSIPATION REQUIRED

The energy generated will either be expressed as BTU per hour (particularly for tensioning applications) or BTU per stop. The formulae for calculating these values are different for industrial, tensioning and vehicular braking. See the formulae section (pages 92-95) to determine the heat generated for your application.

DETERMINE MAXIMUM DISC DIAMETER

There are two criteria to determine disc diameter:

- **ENVELOPE SIZE** – how much room is allowed in the design for disc and caliper. This affects the braking radius and thus the torque that the caliper can develop.
- **HEAT DISSIPATION REQUIRED** – Cycle rate and torque are needed to determine the heat an application will generate per hour, and thus the heat that the disc will need to dissipate. Discs will normally dissipate heat at the rate of 3 BTU per hour, per square foot of disc area. This assumes a disc temperature of at least 80° F above ambient temperature. Discs rotating at extreme speeds may dissipate heat at rates as high as 5 BTU per hour, per square foot of disc area. If required torque, cycle rate and small envelope size combine to create heat dissipation requirements that are greater than standard disc capabilities, your choices are:
  1.) Use a thicker disc (that will act as a heat sink).
  2.) Use multiple discs/calipers for the application.
  3.) Use a ventilated disc (to increase the heat dissipation rate).
  4.) Cool disc with forced air (to increase the heat dissipation rate).

DETERMINE THE TYPE OF BRAKE ACTUATION

Choose a brake based on the type of actuation available (pneumatic, hydraulic, etc.) and whether dynamic or static braking is required for the application.

Tolomatic offers brakes actuated in 5 different ways:

- **PNEUMATIC**

  Pneumatic actuation is used in industrial and tensioning applications because pneumatic service is easily controllable and readily available in most industrial settings.

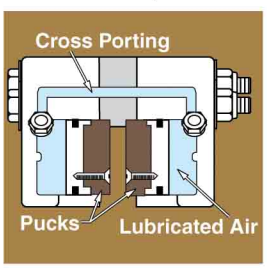

Caliper Disc Brakes

SELECTION: GENERAL

- **HYDRAULIC**

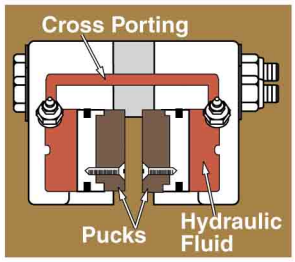

Hydraulic actuated brakes are normally used in applications where higher torque output is needed. They may be operated with a variety of fluids including the standard mineral based hydraulic oils, automotive brake fluids and non-flammable phosphate ester fluids (each requires different seals).

- **MECHANICAL**

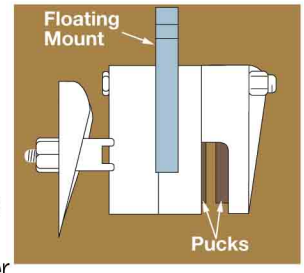

Mechanically actuated brakes are often used for emergency stopping or holding brakes or in situations where pneumatic or hydraulic pressure is not available. Mechanical caliper disc brakes operate when the cam lever is rotated. This pushes the actuating pins against the lining's backing plate thus forcing the lining into the disc.

- **HYDRAULIC / MECHANICAL COMBOS**

Combination brakes give the added flexibility to apply mechanical braking as well as hydraulic braking from one caliper.

- **SPRING APPLIED**

These brakes require pressure (normally hydraulic) to release it from the disc. Braking force is provided by a stack (or stacks) of Belleville spring washers. The conical washers are capable of storing enormous force. When the brake is pressurized the force moves a piston(s) to compress the spring washer stack(s), thus releasing the disc. Because the force applied by the spring stack is reduced as the spring washers expand, spring applied brakes are used mainly for applications that require occasional stopping or holding. They should not be used in tension-constant slip applications or cyclic stopping industrial applications.

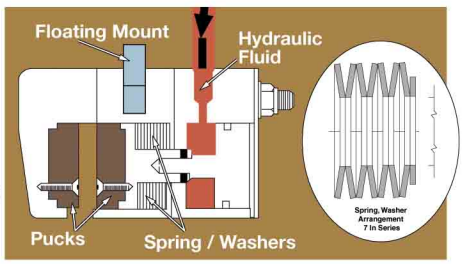

CHOOSE TOLOMATIC BRAKE SIZE

Tolomatic brakes are grouped by size. These sizes relate to the piston size for each brake. Because maximum pressure (lever force) generated differs between the type of brake (pneumatic, hydraulic, etc.), the maximum torque available differs. The graphs on pages 29 to 31 will be helpful in determining the approximate brake size that will work for your application. Go to each individual brake section to find the equations and performance graphs for that brake.

For easy reference, torque output equations that apply to each series of brake are shown at the bottom of the page (see example below). Each equation features:
[1.] a constant value *(A product of brake piston area, the coefficient of friction and a safety factor.)*, multiplied by
[2.] braking radius *(Common disc sizes appear on the page with the dimensional drawing.)*, multiplied by
[3.] pressure (lever force) *(You will need to determine.)*.

DISC SIZING EQUATIONS

STATIC (PARKING) TORQUE (IN.-LBS.) = **6.99 X BRAKING RADIUS** (IN.) **X LEVER FORCE** (LBS.)

BRAKING RADIUS (IN.) = **[DISC DIAMETER ÷ 2] - 0.688**

The performance data graphs represent these equations for common disc sizes in a convenient, visual way to quickly see how well each brake size will fit your application.

CHOOSE DOUBLE ACTING OR SINGLE ACTING BRAKE

Double Acting

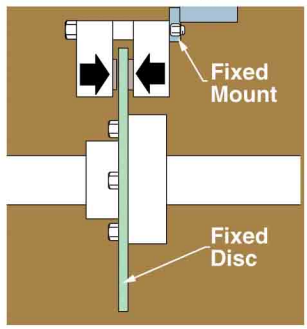

- Double acting brakes feature two "live sides". Each side has a piston that actuates the lining, forcing it against the disc. Hydraulic and pneumatic brakes are available in double acting as well as single acting models.

Single Acting

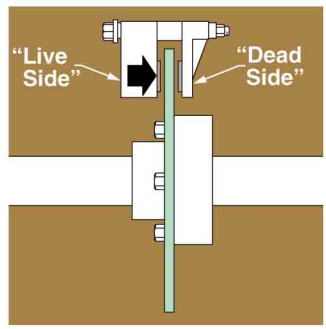

- Single acting brakes have a piston that actuates the lining on the "live side", forcing it against the disc. The "dead side" has a stationary lining attached to the housing. Since only one side has a moving piston, the brakes mounting must allow it to float. Spring applied, mechanical and hydraulic/mechanical brakes are generally single acting.

SELECTION: GENERAL

DETERMINE MOUNT FOR BRAKE AND DISC

- ***For Double Acting Brakes***

FIXED CALIPER MOUNT/ FIXED DISC – A double acting caliper can be fixed mounted since both linings have pistons to move them. The disc is also fixed mounted.

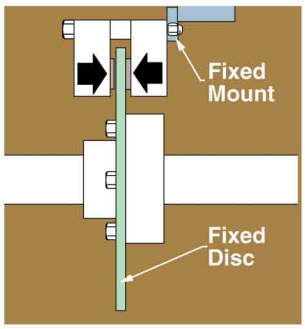

- ***For Single Acting Brakes***

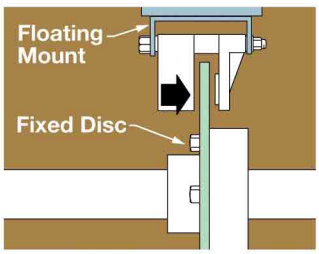

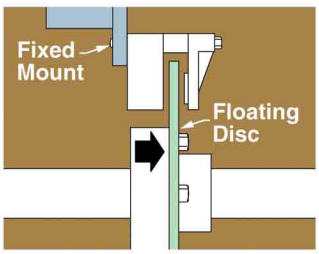

FLOATING CALIPER MOUNT/FIXED DISC – A floating mount bracket permits the caliper to shift position when braking force is applied. The disc is rigidly mounted to the shaft.

FIXED CALIPER MOUNT/ FLOATING DISC – The caliper is rigidly mounted and a floating disc mount attaches the disc to the shaft. The two forms of floating disc are: **1.)** Disc and hub are mounted on a spline on the shaft. **2.)** Hub is rigidly keyed to the shaft and the disc is spring loaded to the hub, providing floating ability.

CONSIDER OPTIONS

Hydraulic brakes may operate with a variety of fluids. Tolomatic brakes use Buna-N seals most commonly. These seals are suited for use with standard mineral based hydraulic oil. EPR seals, for use with automotive brake fluids, are available for most Tolomatic brakes. Some models also give you the choice of Viton® seals, these seals are suited for use with nonflammable phosphate ester fluids.

Some Tolomatic brakes are available with retractable pistons. A brake with this feature has a small compression spring within the piston which causes it to retract from the disc when pressure is released. Retractable brakes are used in applications that require a brake with absolutely no residual drag from the linings on the disc.

Almost all Tolomatic brakes can be modified to fit a variety of disc thicknesses.

NOTE: TOLOMATIC RETRACTABLE BRAKES SHOULD NOT BE USED IN VEHICULAR APPLICATIONS WITH A MASTER CYLINDER OR WITH AN INTENSIFIER.

DETERMINE LIFE EXPECTANCY OF LININGS

Another consideration in selecting a brake is the life expectancy of the linings. This factor is particularly important if the brake is to be placed in a "hard-to-service" location, faces long intervals between servicing, or is to be used in a tensioning-constant slip application.

Basically, lining life expectancy is a factor of the amount of energy transmitted through the lining and may be measured in total number of stops or hours of life. Both measurements may be reduced to horsepower hours of heat that the lining must endure.

Tolomatic's standard lining is made of a non-asbestos organic material and has a maximum operating temperature of 300°F. An optional sintered metallic lining (depending on model) offers maximum operating temperatures from 400° to 500°F. See the formulae section to determine the lining life expectancy for your application.

Caliper Disc Brakes

SELECTION: FORMULAE: INDUSTRIAL

INDUSTRIAL APPLICATIONS FORMULAE

Calculation of Torque Required

Many industrial applications are concerned with rotary motions that must be brought to rest in a specified time. The torque necessary to satisfy the time requirement must be determined. A convenient formula used to calculate the torque requirement of a single shaft system is:

$$T = \frac{WK^2N}{308t} \qquad [1a]$$

Where: **T** = Torque; ft-lbs

W = Weight of rotating member; lbs.

K = Radius of gyration of rotating member; ft.

N = Speed of rotating shaft; rpm

t = Stopping time required; seconds

or: $$T = \frac{WK^2N}{3{,}696t} \qquad [1b]$$

Where: **T** = Torque; in-lbs

K = Radius of gyration of rotating member; in.

Industrial applications often consist of more than one rotating mass system (i.e., two or more shafts with gears, sheaves, drums, etc.) interconnected and operating at different speeds. In such systems the rotating elements must be reduced to a common base. Since the energy of a rotating mass system is a function of the square of its speed, an equivalent WK^2 of each rotating member relative to the shaft on which the brake disc is mounted can be calculated using the formulae in the Radius of Gyration Section (page 93).

Calculation of Heat Generation and Required Dissipation (Industrial)

Heat is always developed in the disc and linings of a brake when a rotating or moving body comes to rest. The kinetic energy in BTUs per stop may be expressed in the following formulae:

$$BTU/Stop = \frac{WK^2N^2}{4{,}570{,}000} \quad \text{for a single shaft system} \qquad [4]$$

$$BTU/Stop = \frac{WK_e^2N_s^2}{4{,}570{,}000} \quad \text{for a multiple shaft system} \qquad [5]$$

or

$$BTU/Stop = \frac{\neq TN_St}{46{,}680} \qquad [6]$$

Where: **T** = Torque; ft-lbs

K = Radius of gyration of rotating member; ft.

The weight and specific heat of the lining material is very small compared to the disc and can be ignored.

Since the amount of heat dissipated per hour by the disc at a given temperature above ambient is considered as being directly proportional to the exposed area of the disc, disc thickness should be kept small. Standard thicknesses are 5/32" and 1/4".

For the best service life the disc temperature should not exceed 300°F. Higher disc temperatures can be allowed, however, there will be a reduction in the life of the friction material. See Figure 1 (page 94).

In many applications there are no restrictions to disc diameter (within reason). Convert your calculated BTU/ Stop to BTU/hr. with the following formula:

$$BTU/hr. = (BTU/stop)(stops/hr.) \qquad [7]$$

Then solve for the number of square feet of exposed disc area to dissipate the heat generated:

$$\text{Sq. Ft. Disc Area} = \frac{BTU/hr}{660} \qquad [8]$$

Refer to Table 1 (page 94) for selection of proper disc diameter.

NOTE: THE ABOVE FORMULA [8] IS BASED ON A 220°F TEMPERATURE RISE AND AN 80°F AMBIENT TEMPERATURE. IF A HIGHER DISC TEMPERATURE IS DESIRED REFER TO FORMULAE [14], [15], [16] IN THE TENSIONING-CONSTANT SLIP SECTION.

If there is a restriction in the disc diameter(s) and there is sufficient time between stops or multiple of stops for heat dissipation then we can size the disc to act as a heat sink.

$$Wd = \frac{BTU/hr.}{(220)(Sp)} \qquad [9]$$

Where: **Wd** = Weight of disc; lbs.

Sp = Specific heat of disc may be taken as .12 for steel; BTU/lbs.-°F

Refer to Table 1 (page 94) for selection. If your requirement falls outside of the standard(s) you may calculate the required thickness based on the maximum allowable diameter:

$$\text{Disc Thickness} = \frac{Wd}{(A)(.28)} \qquad [10]$$

Where: Thickness is in inches

A = Area of maximum allowable diameter; in^2

If it is found the disc thickness is unrealistic from an economic or space limitation standpoint, multiple discs will have to be provided or forced ventilation must be considered.

SELECTION: FORMULAE: RADIUS OF GYRATION, TENSIONING

RADIUS OF GYRATION FORMULAE

Radius of Gyration for Geometric Forms

Radius of gyration is the distance from the center of rotation at which the entire rotating mass could be concentrated and still be equivalent to the actual distributed mass.

Solid Cylinder About its Own Axis

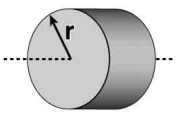

$$k^2 = \frac{r^2}{2}$$

Hollow Cylinder About its Own Axis

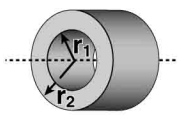

$$k^2 = \frac{r_1^2 + r_2^2}{2}$$

Where: **K** = Radius of gyration of rotating member; ft.

R = Radius of rotating member; ft.

$$WK_e^2 = WK_S^2 + WK_1^2\left[\frac{N_1}{N_S}\right]^2 + \ldots \qquad [2]$$

Where: WK_e^2 = Equivalent WK^2 of the multiple shaft system; lbs-ft^2

WK_s^2 = WK^2 of the shaft assembly on which the brake disc is mounted; lbs-ft^2

WK_1^2 = WK^2 of the second shaft assembly; lbs-ft^2

N_s = speed of the shaft on which the brake disc is mounted; rpm

N_1 = speed of the second shaft; rpm

The formula for the torque required to bring the multiple shaft system to rest then becomes:

$$T = \frac{WK_e^2 N_s}{308t} \qquad [3a]$$

Where: T = Torque; ft-lbs

or

$$T = \frac{WK_e^2 N_s}{3{,}696t} \qquad [3b]$$

Where: T = Torque; in-lbs (WK_e^2 is in lbs-in^2)

TENSIONING / CONSTANT SLIP APPLICATIONS FORMULAE

Calculation of Torque Required

Applications involving tensioning or constant drag require a different set of formulae since there is not a finite time to stop. Tensioning devices are designed to operate over an infinite period of time. The basic formula for calculating torque for web tensioning is:

$$T = (L)(F)(R) \qquad [11]$$

Where: **T** = Torque; in-lbs

L = web width, in.

F = tension; lbs./inch of web width

R = maximum roll radius; in.

The basic formula for calculating BTUs generated per hour is:

$$BTU/hr. = \frac{(T)(rpm)}{24.75} \qquad [12]$$

Calculation of Heat Generation and Required Dissipation (Tensioning)

In tensioning applications the amount of heat generated must be dissipated as well. Often web velocity is given in fpm, this can be converted to rpm by:

$$rpm = \frac{fpm}{C} \qquad [13]$$

Where: **C** = Circumference of roll at maximum diameter; ft.

Therefore to solve for the sq. ft. of surface area of the disc(s):

$$\text{Sq. Ft. Disc Area} = \frac{BTU/hr}{660} \qquad [14]$$

The constant of 660 is based on a maximum disc temperature of 300°F.

To develop a constant for higher disc temperature:

Constant = (3) (temperature rise above ambient) [15]

The actual disc temperature becomes:

Disc Temperature = Temperature Rise + Ambient, °F [16]

Refer to Table 1. Select disc or discs equal to (or greater than) calculated sq. ft. Remember the higher the disc temperature the lower the life of the friction material. See Figure 1 (page 94).

Caliper Disc Brakes

SELECTION: LINING LIFE

LINING LIFE FORMULAE

Calculating Service Life of Lining(s)

The lining life per cubic inch shown by Figure 1 below is based on horsepower hours.

FIGURE 1 – LINING MATERIAL LIFE

(REPLACEABLE HIGH GRADE FRICTION MATERIAL - NON-ASBESTOS, ORGANIC)

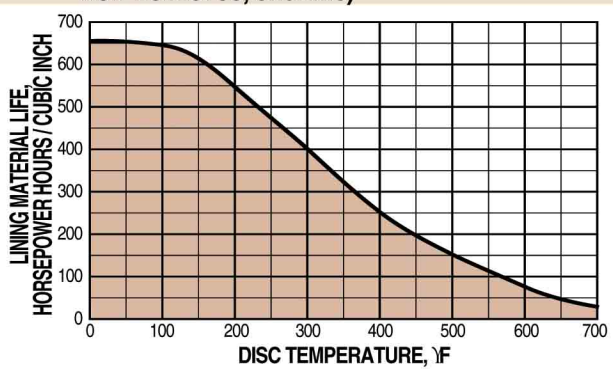

To find the life in hours of lining(s):

(Primarily for tensioning-constant slip applications)

$$\text{Ft-lbs/hr} = (\text{BTU/hr generated})(778) \qquad [17]$$

Refer to Formula [12]

$$\text{HP hrs/hr} = \frac{\text{ft-lbs/hr}}{1{,}980{,}000} \qquad [18]$$

Refer to Table 2 to determine cubic inches of wearable material of various caliper sizes.

$$\text{Life in Hours} = \frac{\left(\text{number of calipers}\right)\left(\text{cubic in. } \textit{Table 2}\right)\left(\text{HP hrs./in}^3\ \textit{Figure 1}\right)}{\text{HP hrs. / hr.}} \qquad [19]$$

To find the life of lining(s) in stops: When a rotating mass is brought to rest, the kinetic energy removed can be calculated by the following formulae:

$$E = \frac{\pi TNt}{60} \qquad [20]$$

or

$$E = \frac{WK^2N^2}{5872} \qquad [21]$$

Where: **E** = Kinetic Energy; ft-lbs

$$\text{HP hrs./Stop} = \frac{E}{1{,}980{,}000} \qquad [22]$$

$$\text{Life in Stops} = \frac{\left(\text{number of calipers}\right)\left(\text{cubic in. } \textit{Table 2}\right)\left(\text{HP hrs./in}^3\ \textit{Figure 1}\right)}{\text{HP hrs. / Stop}} \qquad [23]$$

LINING LIFE CALCULATIONS ARE ESTIMATES AND DO NOT ACCOUNT FOR FOREIGN CONTAMINANTS THAT MAY ABRADE THE LINING OR DISC AND REDUCE LIFE. WHEN THE LIFE MUST BE KNOWN ACCURATELY, FIELD TESTS SHOULD BE CONDUCTED UNDER ACTUAL OR SIMULATED SERVICE CONDITIONS.

TABLE 1 – DISC SPECIFICATIONS

DISC DIAMETER	EXPOSED AREA SQ. IN.	SQ. FT.	SQ MM	WEIGHT* LBS.	KGS.	MAXIMUM BTU / HR.	MAXIMUM JOULE/HR.
6.313	62.58	0.43	40,374	1.37	0.62	283.8	299,360
8.000	100.53	0.70	64,858	3.52	1.60	462.0	487,329
10.000	157.08	1.09	101,342	5.46	2.48	719.4	758,842
12.000	226.20	1.57	145,935	7.91	3.59	1,036.0	1,092,799
16.000	402.12	2.79	259,432	14.06	6.38	1,841.4	1,942,356

*BASED ON A STEEL DISC 1/4" THICK
(EXCEPT FOR Ø6.313 WHICH IS BASED ON A STEEL DISC 5/32" THICK).

TABLE 2 – CUBIC INCHES OF WEARABLE FRICTION MATERIAL

CALIPER SERIES	CUBIC INCHES
10	.46
20	.83
H220 Aluminum	1.66
H220 Cast Iron	2.35
FS220 Aluminum	1.66
FS220 Cast Iron w/ JK options	2.35
H440	3.32
FS440	1.75
H441	3.71
FS595	4.57
H960	8.00
MB3	6.06

CALIPER CUBIC

TABLE 3 – CAM TRAVEL DATA

ME10 and ME20 Calipers

1. 15° maximum travel when linings are new and with 1/32" gap each side of disc.
2. Periodic tightening of lock nut will reduce travel of lever and will allow 1/4" wear on each lining.
3. 90° maximum travel after 3/16" wear on each lining without intermediate tightening of lock nut.

ME220 Calipers

1. Gap between lining faces and disc when new = .048" total.
2. Angular movement required to actuate brake when new = 7° 30".
3. Maximum axial movement without intermediate adjustment = .387".
4. Wear allowed before adjustment .104" each side.

MB3 Calipers

1. 0° travel with .500" disc.
2. 90° maximum travel after .125" wear on each side of lining without intermediate tightening of the lock nut.

SELECTION: FORMULAE: VEHICULAR

VEHICULAR APPLICATIONS FORMULAE

Calculation of Torque Required

$$\textit{Dynamic } T = \frac{WR\left[\frac{a}{g} + \frac{b}{100}\right]}{(D)} \qquad [24]$$

Where:

- **T** = Torque perAxle, vehicle, or wheel; in-lbs
- **W** = Weight on axle including weight transfer, if any, vehicle or wheel; lbs.
- **R** = Loaded tire radius; in.
- **g** = 32.2 ft./sec^2
- **b** = % of grade
- **D** = Gear Reduction, if drive line mounted
- **a** = Deceleration rate; ft/sec^2

And

$$a = \frac{V}{t} = \frac{V^2}{2S} \qquad [25]$$

Where:

- **V** = Velocity of vehicle, ft./sec., at moment of brake application
- **t** = Stopping time required; seconds
- **S** = Stopping distance of vehicle; ft.

$$\textit{Parking } T = \frac{WR\left[\frac{b}{100}\right]}{D} \qquad [26]$$

Calculation of Heat Generation and Required Dissipation (Vehicular)

$$E = \frac{WV^2}{2g} \qquad [27]$$

Where:

- **E** = Kinetic Energy; ft-lbs
- **W** = Weight of axle, vehicle, or wheel; lbs.
- **V** = Design speed of vehicle; ft/sec.

$$\text{BTU/hr. generated} = \frac{(E)(\text{stopping frequency/hr.})}{778} \qquad [28]$$

Then solving for the number of square feet of exposed disc area to dissipate the heat generated:

$$\text{Sq. Ft. Disc Area} = \frac{BTU/hr}{660} \qquad [14]$$

The constant of 660 is based on a maximum disc temperature of 300°F.

If there is a restriction in the disc diameter(s) and there is sufficient time between stops or multiple of stops for heat dissipation then we can size the disc to act as a heat sink.

$$Wd = \frac{BTU/hr.}{(220)(Sp)} \qquad [9]$$

Where:

- **Wd** = Weight of disc; lbs.
- **Sp** = Specific heat of disc may be taken as .12 for steel; BTU/lbs-°F

Refer to Table 1 (page 94) for selection. If your requirement falls outside of the standard(s) you may calculate the required thickness based on the maximum allowable diameter:

$$\text{Disc Thickness} = \frac{Wd}{(A)(.28)} \qquad [10]$$

Where:

- Thickness is in inches
- **A** = Area of maximum allowable diameter; in^2

If it is found the disc thickness is unrealistic from an economic or space limitation standpoint, multiple discs will have to be provided or force ventilation must be considered.

Caliper Disc Brakes

APPLICATION DATA WORKSHEET

Use this form to request engineering assistance. The data you furnish will enable us to understand your application and recommend* the proper braking equipment. When available, please attach prints or dimensional drawings.

NAME: _____

TITLE: _____

FIRM: _____

ADDRESS: _____

CITY: _____

STATE: _____ ZIP: _____

PHONE: (_____) _____

FAX: (_____) _____

A. VEHICLE SPECIFICATIONS

PLEASE CONTACT FACTORY

B. TENSIONING DATA

_____

C. STATIONARY EQUIPMENT SPECIFICATIONS

CYCLIC STOPS? ☐ Yes ☐ No

W = Weight of rotating member, lbs.

R = Radius of rotating member, ft.

WK^2 OF ROTATING PARTS_____@RPM _____

DECELERATION NEEDED:

☐ Time_____ seconds from _____RPM

☐ _____ Radians per sec.^{2}

RELEASE PRESSURE FOR SPRING-APPLIED BRAKES ..... _____ psi

TYPE OF EQUIPMENT BRAKES WILL BE USED ON:

_____

MODEL: _____ PROJECT #: _____

D. GENERAL APPLICATION DATA

FREQUENCY OF STOPS:..... _____

COMPLETE OPERATING CYCLE:..... _____

MAXIMUM ALLOWABLE DISC DIAMETER:..... _____in.

MAXIMUM ALLOWABLE DISC THICKNESS:..... _____in.

TYPE OF ACTUATION: ☐ Mechanical ☐ Spring Applied ☐ Pneumatic ☐ Hydraulic

MAXIMUM HYDRAULIC OR AIR PRESSURE:..... _____ psi

BACK PRESSURE: ..... _____ psi

DRIVE SHAFT APPLICATIONS ONLY:

Gear ratio is_____in favor of_____, or against_____the brake

AVAILABLE DISPLACEMENT:..... _____ in.^{3}

TYPE OF FLUID: _____MAXIMUM TORQUE: _____in.-lbs.

AMBIENT TEMPERATURES TO BE ENCOUNTERED:..... _____°F

LINING LIFE DESIRED: ..... _____

LEVER FORCE AVAILABLE..... _____lbs.

E. ADDITIONAL COMMENTS

_____

* Recommendation is based on information supplied by the customer. Final acceptance and approval is the responsibility of the customer after field testing or simulation of field testing on the machine it is designed for.

Tolomatic
EXCELLENCE *IN MOTION*®

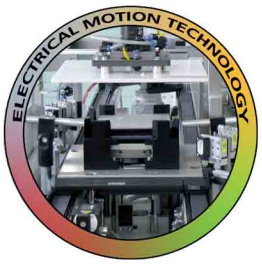

We look forward to your application.

LDA Belgium

Hoge Buizen 53
1980 Eppegem
Belgium

Tel. +32 (0)2-266 13 13
Mail: LDA@LDA.be

www.LDA.be