REVISIONS				
REV	ECR	DESCRIPTION	DATE	APPROVED

NOTES (UNLESS OTHERWISE SPECIFIED)

1. LINAR SPECIFICATIONS:
   LINEAR STROKE: 10 mm
   ENC. RESOLUTION(+A/-A;+B/-B): 5 um
   ENCODER REPEATABILITY: 20 um
   INDEX LOCATION(+Z/-Z): 2mm H.STOP
   OPERATING VOLTAGE: 24 Vdc
   COIL RESISTANCE: 12 Ohm
   COIL INDUCTANCE: TBD mH
   PEAK FORCE: 10 N @ 24Vdc
   FORCE CONSTANT: 5 N/A
   MOVING MASS: 0.025 kg
   TOTAL MASS: 0.02 kg
2. VACUUM OPTION: NO
3. SPRING OPTION: NO
4. OPERATING TEMPERATURE: 0°C TO 40°C
5. PLATING: CERAKOTE, BLACK

www.LDA.be - LDA@LDA.be - + 32(0)2-266 13 13

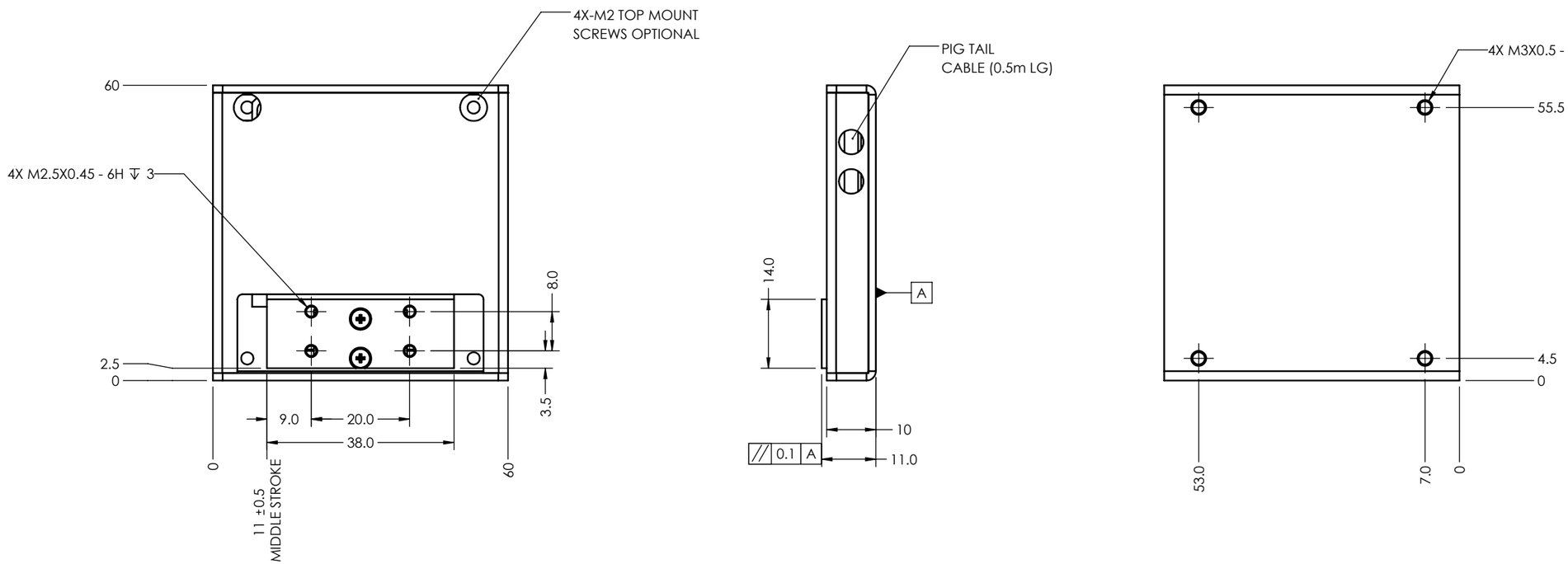

PIN No	HDB-26P
1	(L) PH. A+
2	(L) PH. B+
3	(L) PH. Z+
4	NC
5	NC
6	NC
7	NC
8	NC
9	NC
10	(L) PH. A-
11	(L) PH. B-
12	(L) PH. Z-
13	NC
14	NC
15	NC
16	NC
17	NC
18	NC
19	+5 VDC
20	5V RTN
21	(L) MOTOR+
22	(L) MOTOR+
23	(L) MOTOR-
24	(L) MOTOR-
25	NC
26	NC

PIN No	PHOENIX. 4P
1	GND
2	+V
3	MOTOR +
4	MOTOR -

REF. NUMBER	LDS10
CONTRACT	LDS10-010

UNLESS OTHERWISE SPECIFIED
ALL DIMENSIONS ARE IN MM
BREAK EDGES AND REMOVE BURRS
TOLERANCES
X.: ±0.5 X.X: ±0.1
X.XX: ±0.03 ANGLE: ±0.1°
CONCETRICITY: ±0.025
ROUNDNESS: ±0.025
EDGE BREAKS: 0.2 MAX
ALL DIMENSIONS AND TOLERANCES ARE FINAL

MATERIAL:
FINISH:
MACHINE FINISH: 1.6
INTERPRET PER: ASME Y14.5-2009
THIRD ANGLE PROJECTION

	NAME	DATE
DWN BY	TV	10/15/21
CHK BY	TV	10/15/21
ENG APP	TOAN VU	10/15/21
MFG APP		
QA APP		

PROPRIETARY AND CONFIDENTIAL
THE INFORMATION CONTAINED IN THIS DRAWING IS THE SOLE PROPERTY OF SMAC. ANY REPRODUCTION IN PART OR AS A WHOLE WITHOUT THE WRITTEN PERMISSION OF SMAC IS PROHIBITED.

SMAC
MOVING COIL ACTUATORS
5807 VAN ALLEN WAY
CARLSBAD CA, 92008
(760) 929-7588

TITLE: LDS10-010-55-2

SIZE: B | PART NO: LDS10-010-55-2 | REV: A

SCALE: 1:1 **DO NOT SCALE** | SHEET: 1 / 1