I. Introducing : Proportional Pressure Controller

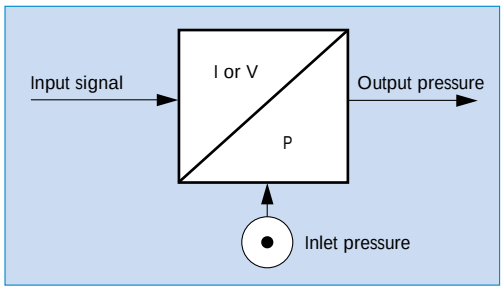

The MAC Proportional Pressure Controller, (PPC) is an innovative product which converts an electrical signal into a proportional pneumatic output. The PPC is unlike conventional I/P or V/P transducers. It offers much more in terms of performance, features, and reliability.

The key to the MAC PPCs are two MAC 34, 45, 400, 47, 92 or 93 Series valves that are used to control the output pressure. The valves are operated by the PPCs closed loop electronic control circuit. Feedback is obtained from one or two transducers. The balanced poppet, fast response, and high flow of these two MAC Valves provide outstanding performance characteristics for the PPC.

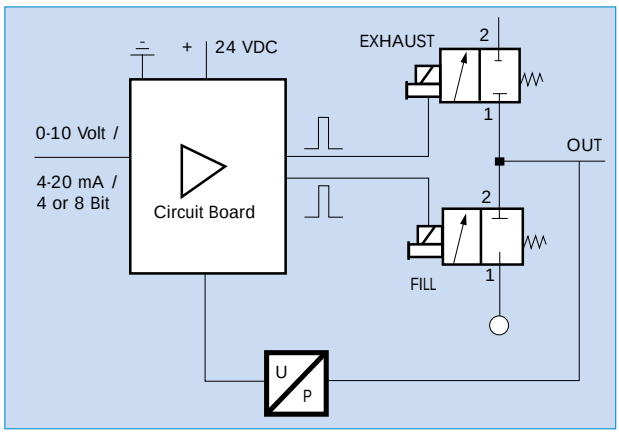

The PPC controls output pressure by constantly measuring its down stream pressure and comparing it to the command signal. If a higher pressure is commanded the PPC quickly responds by actuating the MAC fill valve, increasing the output pressure until it is equal to the pressure represented by the command signal. Conversely, if a lower pressure is required, the PPC will energize the MAC exhaust valve, decreasing output pressure until the correct pressure is achieved. All of this happens very quickly to smoothly maintain the correct pressure.

This approach to pressure control provides a small, light, and cost effective unit. Unlike voice coil units, the PPC is not affected by vibration or mounting position. Unlike large direct solenoid proportional units, the PPC is small and light, drawing little power, and producing little heat. Unlike units that utilize unbalanced air valves, the PPCs balanced valves provide high flow and extremely fast and repeatable response times as well as eliminating “undershoot” and “overshoot” problems normally associated with unbalanced valve designed units. Other proportional products often incorporate valves from third party manufactures. All MAC PPCs utilize only fast shifting, repeatable, high flow, long life MAC Valves as fill and exhaust valves.

II. Configuration

The PPC is available in many configurations.
The PPC5C can be ordered with a single or dual transducer, with an analog or digital command signal, for pressure or vacuum service. All other PPCs can be ordered with a single transducer with an analog command signal.
Single transducer PPCs can be configured with internal sensing (stand alone) or with external sensing (e.g. for Proportional Multi-Pressure Pak®). Dual transducer PPCs are available for controlling other devices such as boosters.
PPCs with analog or digital command signal are chosen following the command device available for the application.
Most PPC Series are available as covered or coverless devices. Coverless PPCs are intended for use in cabinets or areas protected from moisture while covered PPCs can be used in unprotected environments (Washdown).
MAC offers a multitude of special modifications designed to meet customers specific application requirements. Please contact your local MAC distributor for consultation if our standard product options do not fulfill your requirements.

III. Specifications

LINEARITY

The linearity parameter shows the capability of the unit to follow the input signal according to an ideal straight line curve.
MAC PPCs exhibit excellent linearity throughout the pressure range. The deviation is measured in ± % of full scale.

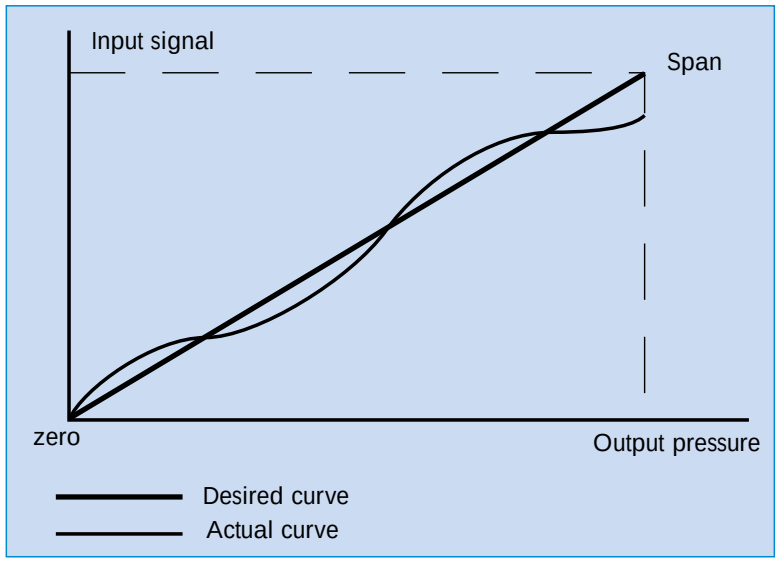

LIMITS OF ADJUSTMENT

For single transducer models, two parameters can be adjusted. Primarily these should be set by the factory but can be done in the field if absolutely necessary. The first parameter is the ZERO adjust, the second is the SPAN adjust. These parameters provide the possibility of customizing the PPC according to customers needs. However these adjustments are limited due to the tolerances of the transducers. If adjustments are necessary, please consult the factory or your local distributor

Note: Dual transducer models are not field adjustable.

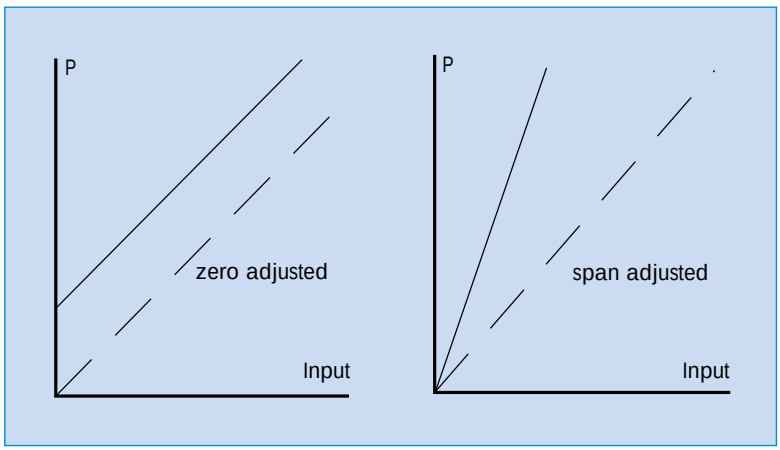

HYSTERESIS

The hysteresis error, sometimes called “deadband”, is the amount of output pressure variance required to cause the PPC to react, making a correction to the output pressure. It is given in percent of full scale pressure, all MAC PPC products perform with minimal hysteresis.

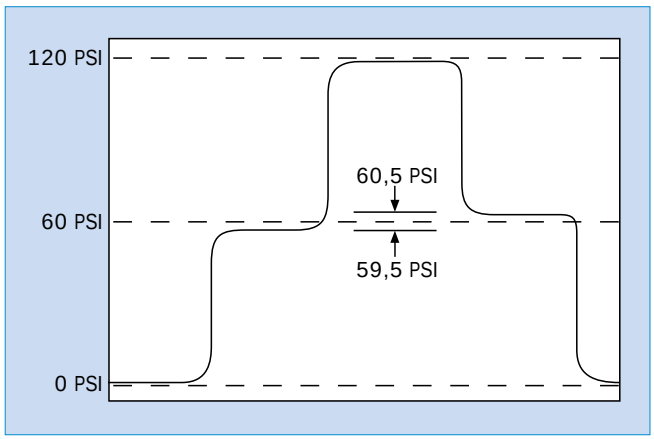

ACCURACY

MAC Valves states accuracy of the MAC PPCs as overall accuracy. Accuracy is expressed in percent of full scale, which includes hysteresis and linearity. Some suppliers give separate parameters in order to give a better impression. In this case hysteresis and linearity are added. MAC PPCs are extremely accurate and maintain excellent control of output pressure well within our stated accuracy.

OVERSHOOT – UNDERSHOOT

Two undesirable characteristics of other proportional control units available on the market are overshoot and undershoot.

Overshoot is a characteristic of the regulator to exceed the desired output pressure when the command signal is given. Undershoot is a characteristic of the regulator to fail to reach the desired output pressure.

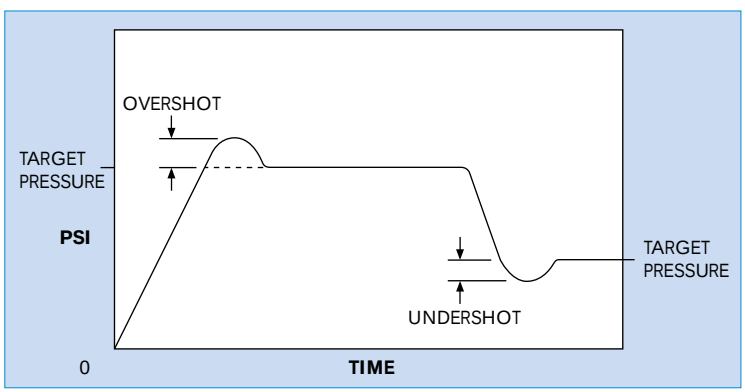

The PPC is based on a closed loop design which combined with MACs fast responding, very repeatable, high flow, balanced 2-way valves, optimizes response and accuracy, practically eliminating overshoot and undershoot.

CLOSED END VOLUME

The closed end volume is the amount of volume needed to keep the PPC stable. If the closed volume to be filled is not appropriate for a particular PPC model (too small in comparison with the flow of air coming from the PPC), it will be very difficult to control the desired pressure inside this volume. So the PPC will be required to compensate for any small variation of pressure and the device will be unstable. This instability is sometimes referred to as “motorboating” or the continuous energizing and de-energizing of the fill and exhaust valves. Minimum volume requirements to prevent “motorboating” are listed for each PPC in this catalog for your reference.

IV. Command Signal Options

The PPC can be controlled with either an analog command signal or a digital command signal.

ANALOG COMMAND SIGNAL

The analog command signal can be either 0 – 10 VDC (voltage) or 4 – 20 mA (current).

Two wires are necessary to accept the command signal. The PPC measures the voltage differences between the two wires to determine the desired pressure output. Along with the command signals, a 24 VDC source must be available to operate the PPC. The return path for the 24VDC source and the return path for the command signal must not be isolated from each other. An example of how to wire the PPC with a differential command signal is shown below.

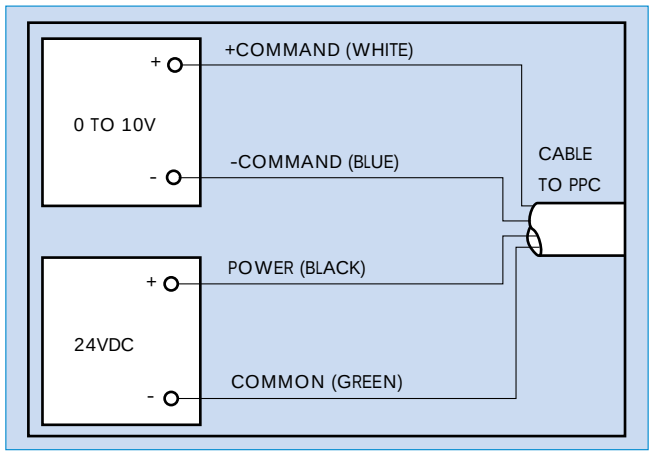

The major advantages of the command signal for the PPC are :

- Elimination of ground loop noise.
- Operation of multiple PPC's from a single power supply.
- Easy to connect to single-ended equipment.

DIGITAL COMMAND SIGNAL

The PPC, through the use of a converter board, accepts a digital command signal for 4-bit or 8-bit binary logic and converts this to an analog signal to produce a proportional pressure.

Using a 4-bit digital input, the maximum number of different pressures available at the output is 16. If an 8-bit digital input is specified, a much finer resolution (256 pressures at the output) can be obtained. For example, in a 100 PSI output system, using 4-bit logic, each bit is equal to 6.67 PSI. With an 8-bit digital, each bit is equal to .392 PSI

There are four different models available for the 4-bit and 8-bit digital PPC based on the type of input signal :

1. Positive Logic/Sourcing Input
2. Negative Logic/Sourcing Input
3. Positive Logic/Sinking Input
4. Negative Logic/Sinking Input

Positive Logic is defined as a minimum command level (all bits are logic low) controlling a minimum pressure output. For example, in a 4-bit system, a 0000 digital signal would correspond to zero psi and a 1111 digital signal would correspond to the maximum pressure.

Negative Logic is defined as a maximum command level (all bits are logic high) controlling a minimum pressure output. For example, in a 4-bit system, a 1111 digital signal would correspond to zero psi and a 0000 digital signal would correspond to the maximum pressure.

Sinking Input requires the digital voltage to be supplied by the controller connected to the input of the PPC. A command signal must be supplied by the external controller to the digital input connections. The PLC "drives" the PPC, by which a digital input (as opposed to analog) will control the output pressure.

Sourcing Input requires the PPC to produce the digital voltage. The controller connected to the input of the PPC is required to "pull the logic level down to zero" or to "maintain the logic level at one". "Zero" is considered that level of the signal which corresponds to the minimum value of the digital input supply (logic low). "One" is considered that level of the signal which corresponds to the maximum positive value of the digital input supply (logic high). In this case, the PPC "drives" the PLC. Again, a digital input will control the output pressure.

V. Monitor Signal Options

The PPC is available with two optional monitor signals. The Analog Monitor Signal (AMS), and the Logic Monitor Signal (LMS). The PPC may be ordered with either one or both of these signals. Monitor Signals provide intelligent feedback to the controlling device.

ANALOG MONITOR SIGNAL -AMS-

The Analog Monitor Signal is a 0 to 10 VDC feedback signal that provides a voltage proportional to the pressure output of the PPC or the output of the device it is controlling. In the case of MACs Proportional Multi-Pressure Pak®, the AMS signal provides a voltage output proportional to the output pressure of the PMPP.

The AMS may be used by the controlling device to verify that the correct pressure has been achieved. Also, the AMS may be connected to a voltage meter to display the pressure output. In some applications, the AMS is fed into the analog input of a controller to provide data for Statistical Process Control. In either case, a high impedance input is required for proper operation.

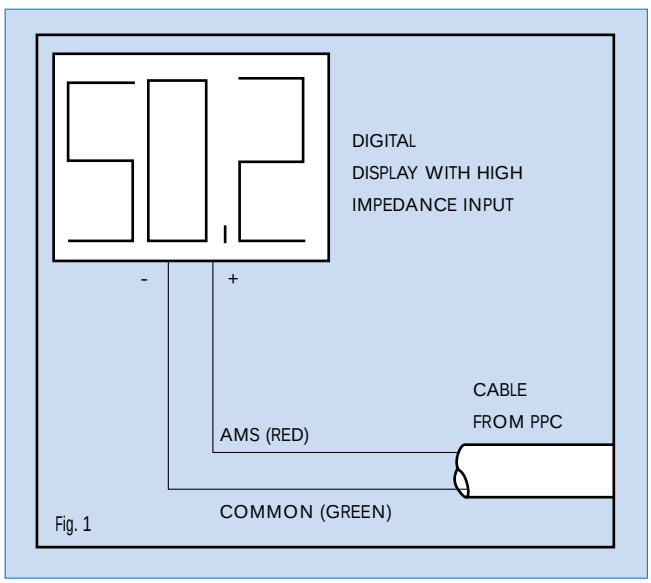

Fig. 1

Figure 1, shows how to wire the AMS to a panel meter to display pressure output.

LOGIC MONITOR SIGNAL -LMS-

The Logic Monitor Signal provides digital feedback to confirm that the PPC has achieved the correct pressure. The LMS provides standard logic levels such as TTL (5V) or 24 VDC.

With the TTL option, when correct pressure is achieved, the LMS outputs a logic 1, (5 VDC). When the PPC is working, (Fill or Exhaust valve is in operation) the LMS outputs a logic 0, 0 VDC.

Figure 2 shows how to wire the LMS to a controller's TTL input.

The LMS provides a simple "go/no go" signal back to the controlling device. The LMS may also be used to turn on an L.E.D. for remote indication.

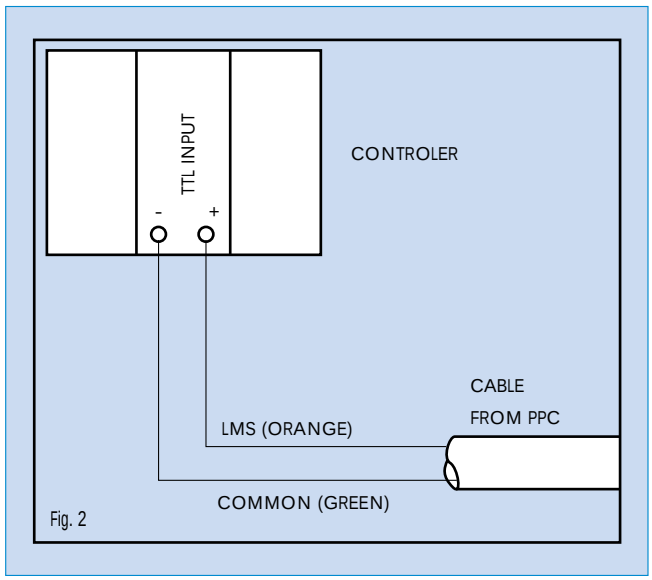

Fig. 2

There also is a negative logic version (LMS) available. When the correct pressure is achieved, this option outputs a logic 0. When the PPC is working (fill or exhaust valve is in operation) the output is a logic 1. In either case, the LMS circuit is a sinking type of output. Thus, the PPC supplies the ground to the reading device.

PPCB10 How To Order Information

PPC B10A - X XX - XX X X - X X X
1 2 3 4 5 6 7 8

1 Type

A Analog

2 Mounting / Port Size & Type

AA Base Side Port 1/8” NPTF
AB Base Side Port 1/8” BSPPL
AC Base Side Port 1/8” BSPTR
AD Base Side 10/32
AE Base Side Port M5
AF Base Side M4 Tube Receptacle
AG Base Side 5/32 Tube Receptacle
CA* Base Manifold Mt.
DA DIN Rail Base 1/8” NPTF Side Port
DB DIN Rail Base 1/8” BSPPL Side Port
DC DIN Rail Base 1/8” BSPTR Side Port
DD DIN Rail Base 10/32 Side Port
DE DIN Rail Base M5 Side Port
DF DIN Rail Base M4 Tube Receptacle
DG DIN Rail Base 5/32 Tube Receptacle

3 Pressure Range

0A 100 psi
0B 60 psi
0C 30 psi
0D 15 psi
0N 10 psi
0T 45 psi
0J 75psi
0L 4 psi

4 Pressure Reference

G Gage Pressure

5 Accuracy

A ± 1.5% F.S.
C ± 0.5% F.S.
E ± 2.5% F.S.

6 Command Signal

B 0 - 10v Differential
D 4 - 20mA Differential

7 LMS Signal

A TTL LMS & AMS

8 Cover

A No Cover

*To be used with EPP Circuit Bar

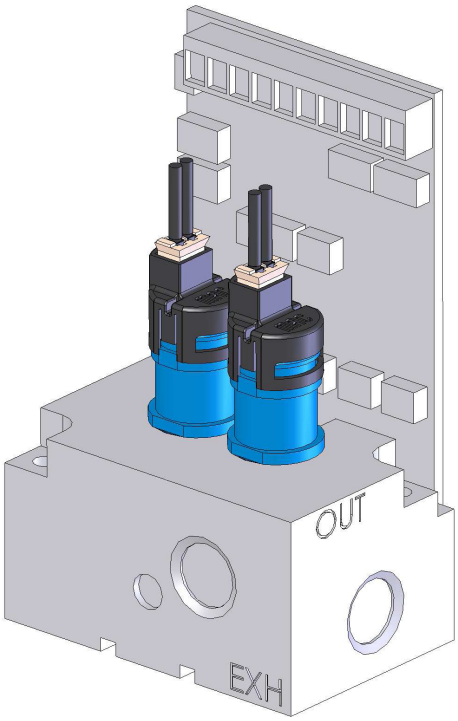

EPPB10A How To Order Information

EPP B10A - XX X X X - XX - 9

1 2 3 4 5 PPC Assembled to Bar

1 Spacing

00 29.00mm Spacing

2 Configuration

A Side Cylinder Ports

3 Style

A Standard

4 Port Size and Thread Type

A 1/8” NPTF
B 1/8” BSPPL
C 1/8” BSPTR
D M4 Tube Receptacle (NPTF Commons)
E M4 Tube Receptacle (BSPPL Commons)
F M4 Tube Receptacle (BSPTR Commons)
G 5/32 Tube Receptacle (NPTF Commons)
H 5/32 Tube Receptacle (BSPPL Commons)
J 5/32 Tube Receptacle (BSPTR Commons)

5 Stations

Number of Stations (02, 03, 04, etc.)

Note: “CA” Mounting Type PPC Required

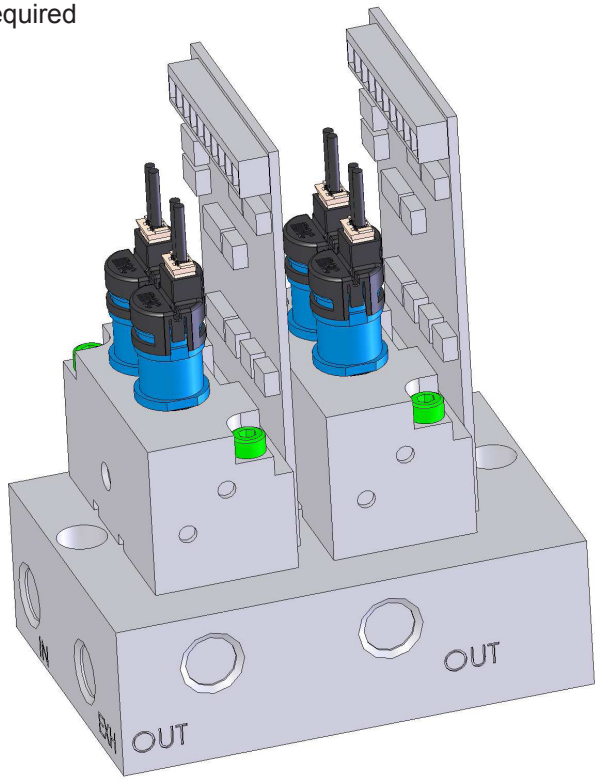

PPCB10 Manifold Mount Dimensional Info

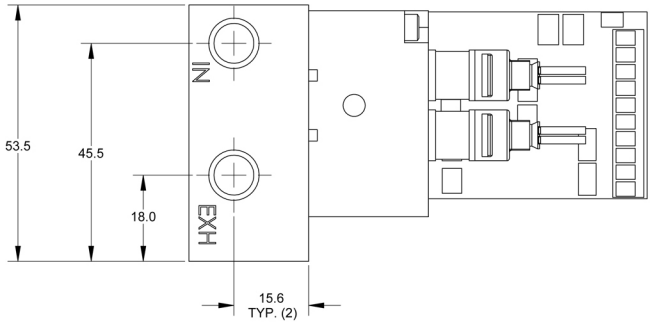

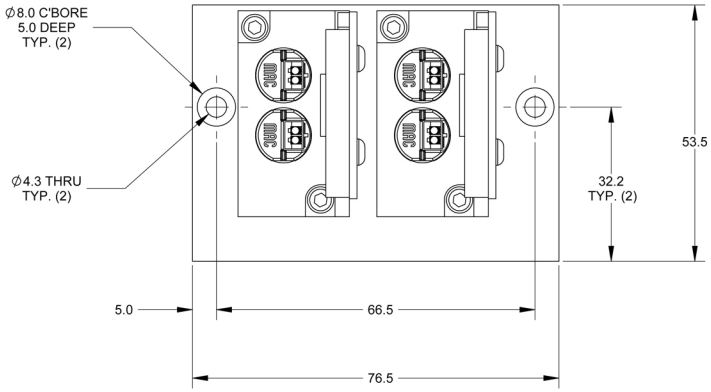

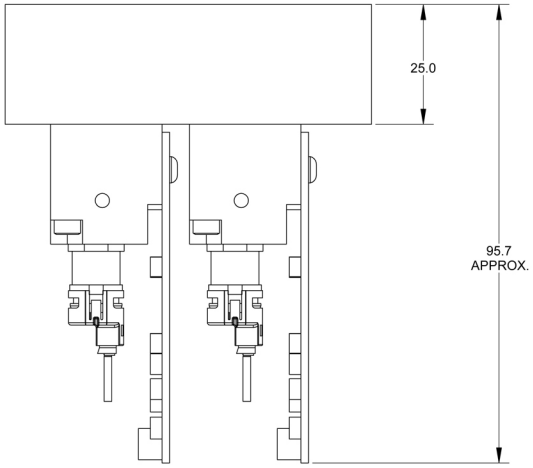

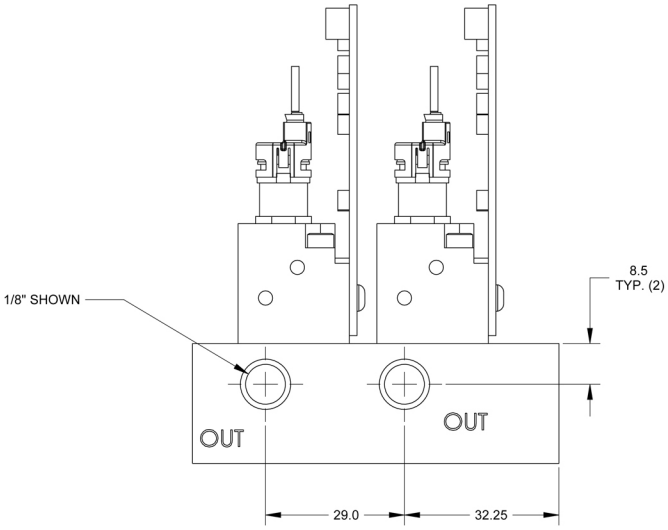
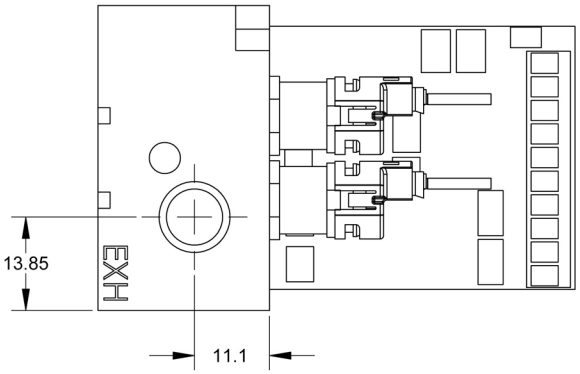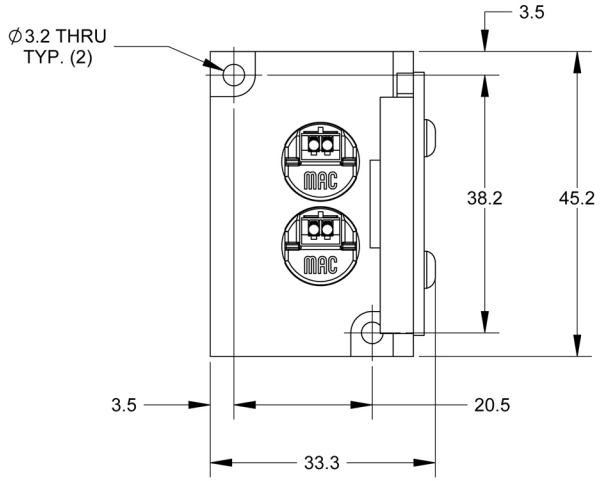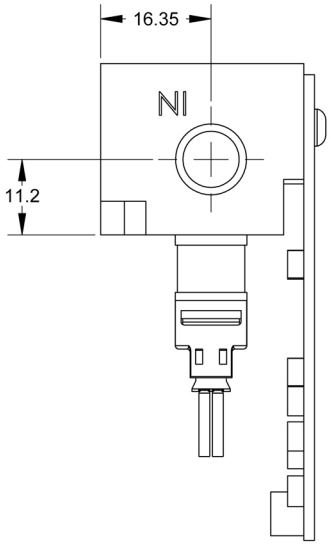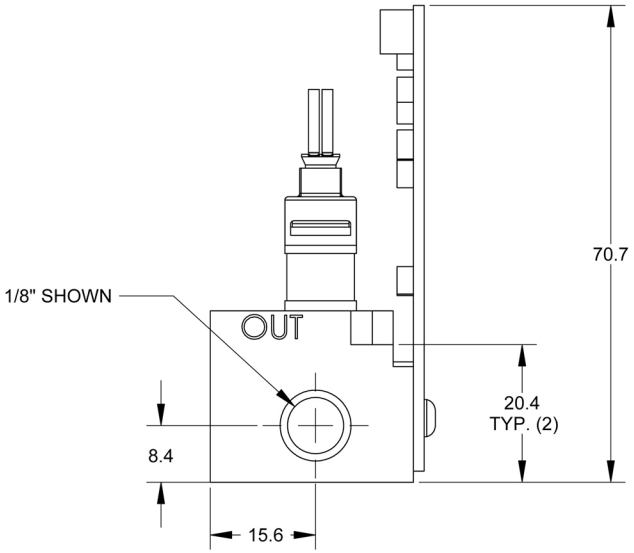
PPCB10 Inline Dimensional Information